Infrared detectors for detecting hot objects
| OD 100 GPP

- Sensor with 2 adjustable switching points in the detection range 0° C...300° C
- Contactless temperature measurement
- Robust stainless steel housing
- Two PNP switching outputs
- For use in rough industrial environments

M38x1.5 -sensing range 0...300 °C - Output 2x PNP NO



TYPE	OD 100 GPP
Product ID	P61003
Detection range °C	0 °C ... 300 °C
Field of view	< 10 °
Output	2 x switching output
Output function	PNP-NO
Supply voltage	18...32 V DC
Current consumption max.	20 mA
Switching current max.	400 mA
Overcurrent release	450 mA
Voltage drop max.	2 V
Reproduction	± 1 °C
Temperature coefficient [%/K from measured value]	± 1 %/K
Hysteresis	5 °C
Response time	100 ms
Ambient temperature	-10 °C ... 60 °C
EMC-class	A
Material housing	stainless steel AISI 316 Ti
Protection [EN 60529]	IP 67
Electrical connection	M12 connector

EGE-ELEKTRONIK SPEZIAL-SENSOREN GMBH
TEL. +49 4346 41580 . ege-elektronik.com

Note Accessories	Accessories: See “Accessories for infrared detectors”

Technical Image

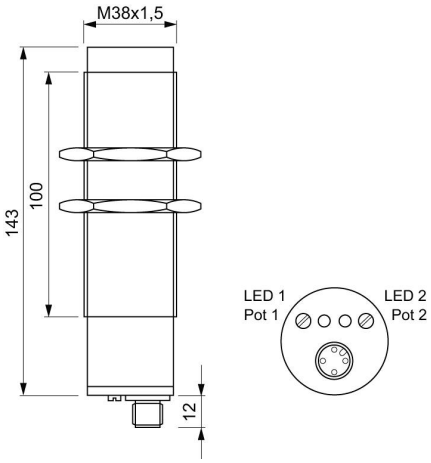

Pin Map

