Infrared detectors for detecting hot objects | ODMO 402 WS

- For the detection of hot objects such as steel girders or flames
- Detection range object temperatures 300 °C
- Robust stainless steel and glass design
- With water-proof plug connection
- For use in rough industrial environments



Sensing temperature 300 °C - 2°-optics - 2-wire AC NO

TYPE	ODMO 402 WS
Product ID	P60051
Response temperature	300 °C
Field of view	2 °
Output	switching output
Output function	relay NO
Supply voltage	20...250 V AC
Current consumption max.	3 mA
Switching current max.	400 mA
Short circuit proof	no
Voltage drop max.	7 V
Minimum load current	20 mA
Hysteresis	approx 5 % of the sensing temperature
Ambient temperature	-20 °C ... 75 °C
EMC-class	A
Material housing	stainless steel AISI 316 Ti
Protection [EN 60529]	IP 68 / IP 69
Electrical connection	VEG 5-5, IP 68
Note Accessories	Accessories: See “Accessories for infrared detectors”

EGE-ELEKTRONIK SPEZIAL-SENSOREN GMBH

TEL. +49 4346 41580 . ege-elektronik.com

Technical Image

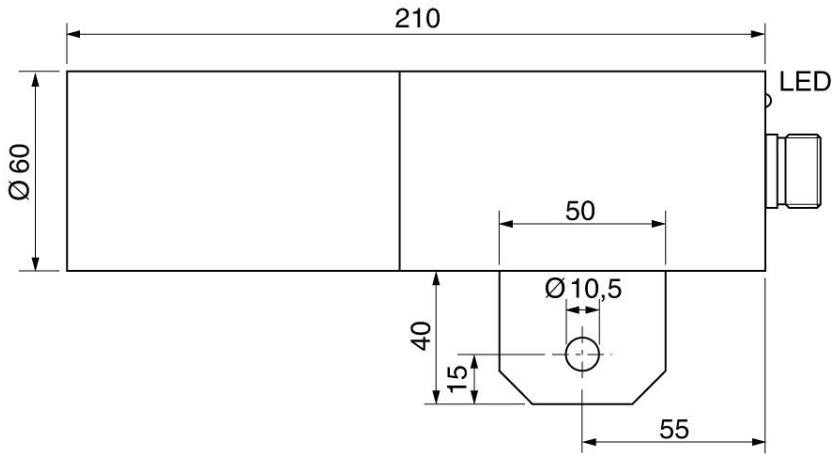

Pin Map

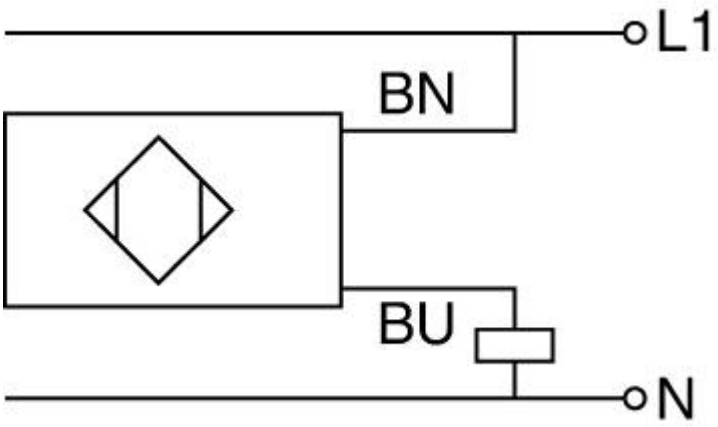

EGE-ELEKTRONIK SPEZIAL-SENSOREN GMBH

TEL. +49 4346 41580 . ege-elektronik.com