# Amplifier MDV 3100. | MDV 3173 GR

- Analysis device for detecting larger metal parts under rough conditions
- Analysis unit for metal detector system for the protection of cutters, grinders, rollers and crushers against metal parts in the conveyed material Protection against metal parts such as digger bucket teeth, tool components or panelling
- Automatic calibration
- "Fail-safe" logic permanently set for switching output



**24 V DC - relay changeover**

| | |
|---|---|
| **TYPE** | MDV 3173 GR |
| **Product ID** | P81064 |
| **Output** | switching output |
| **Output function** | relay |
| **Supply voltage** | 24 V DC +/- 10 % |
| **Current consumption max.** | 100 mA |
| **Switching voltage max.** | 250 V AC / 220 V DC |
| **Switching current max.** | 2 A DC, 1 A AC |
| **Switching power max.** | 1000 VA / 60 W (cos φ = 1) |
| **Ambient temperature** | -25 °C ... 70 °C |
| **EMC-class** | A |
| **Material housing** | PVC |
| **Display** | LED |
| **Protection [EN 60529]** | IP 67 |
| **Electrical connection** | 2 m PVC-cable 7x0.5 mm² |
| **Accessories** | central screw M16x1 (Z00105) is part of delivery |



EGE-ELEKTRONIK SPEZIAL-SENSOREN GMBH
TEL. +49 4346 41580 . ege-elektronik.com

Technical Image

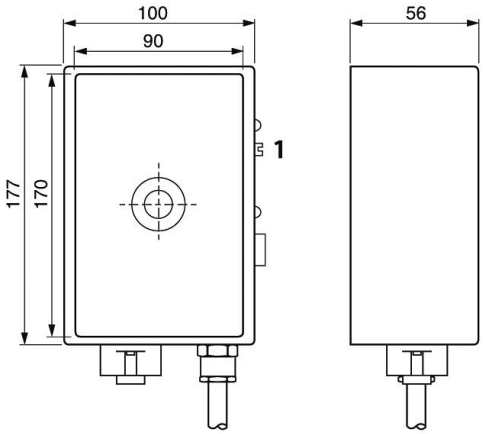


**1** Potentionmeter

Diagram

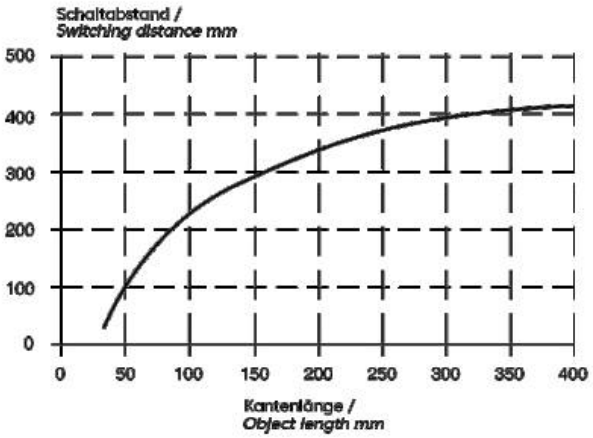


**Maximale Empfindlichkeit mit Probekörper aus ST 37 /**

***Maximum sensitivity with ST 37 sample***



**EGE-ELEKTRONIK SPEZIAL-SENSOREN GMBH**

TEL. +49 4346 41580 . ege-elektronik.com