Amplifier MDV 3200 | MDV 3220 GR

- Analysis unit for metal detector system 3000
- For the protection of cutters, grinders, rollers or crushers against metal parts
- Automatic regulation adaption
- With sensitivity adjustment knob
- Test button

24 V DC - relay changeover



TYPE	MDV 3220 GR
Product ID	P81061
Output	switching output
Output function	relay
Supply voltage	24 V DC +/- 10 %
Current consumption max.	100 mA
Switching voltage max.	250 V AC / 220 V DC
Switching current max.	2 A DC, 1 A AC
Switching power max.	1000 VA / 60 W (cos φ = 1)
Ambient temperature	-25 °C ... 70 °C
EMC-class	A
Material housing	aluminum
Display	LED
Protection [EN 60529]	IP 67
Electrical connection	2 m PVC-cable 7x0.5 mm²
Note	With the potentiometer it is possible to adjust the sensitivity. The amplifier MDV 3220 has a relay-change over-function. During metal detection, the relay is activated and contact 4-5 is closed (2-5 is open)., By pushing the test button it is possible to test the complete function of the MDV 3220.

EGE-ELEKTRONIK SPEZIAL-SENSOREN GMBH
TEL. +49 4346 41580 . ege-elektronik.com

Technical Image

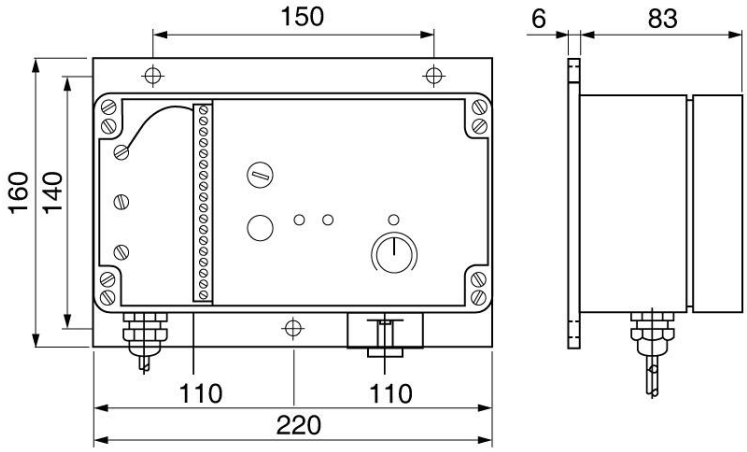

Pin Map

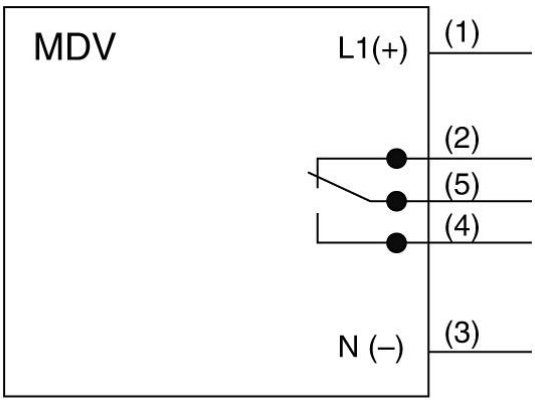

EGE-ELEKTRONIK SPEZIAL-SENSOREN GMBH

TEL. +49 4346 41580 . ege-elektronik.com