Amplifier MDV 3200 | MDVH 3261 GR

- Analysis unit for metal detector system 3000
- For the protection of cutters, grinders, rollers or crushers against metal parts
- Functionally reliable due to system test
- Diagnostic LED for faster installation
- "Fail safe" logic selectable for switching output

24 V DC - relay changeover



TYPE	MDVH 3261 GR
Product ID	P81066
Output	switching output
Output function	relay / change-over
Supply voltage	24 V DC +/- 10 %
Current consumption max.	250 mA
Switching voltage max.	250 V AC / 220 V DC
Switching current max.	2 A DC, 1 A AC
Switching power max.	125 VA / 60 W
Ambient temperature	-25 °C ... 60 °C
EMC-class	A
Material housing	aluminum
Display	LED
Protection [EN 60529]	IP 67
Electrical connection	terminal screws

EGE-ELEKTRONIK SPEZIAL-SENSOREN GMBH
TEL. +49 4346 41580 . ege-elektronik.com

Technical Image

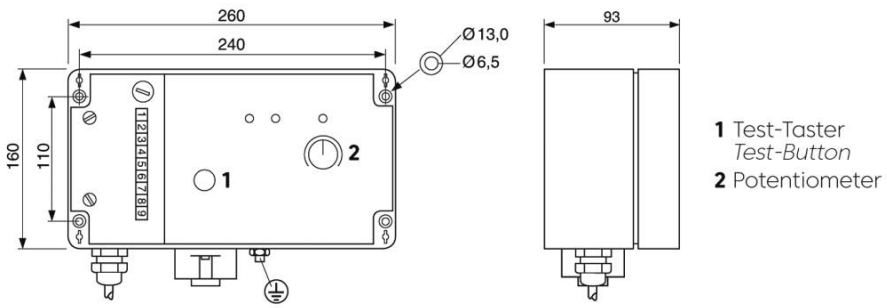

Diagram

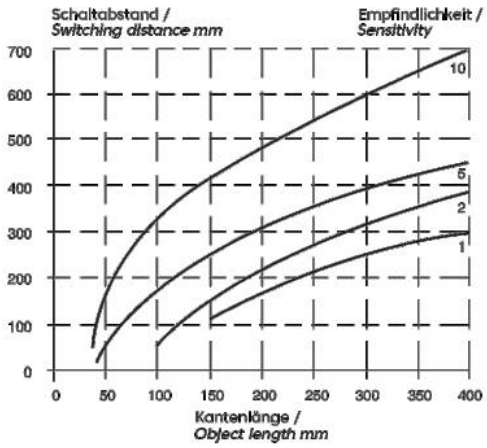

Maximale Empfindlichkeit mit Probekörper aus ST 37 /

Maximum sensitivity with ST 37 sample