Accessory | NTG 255

The power supply isolation unit is connected between the power supply and the amplifier MDV... it limits the power supply overvoltage and therefore protects the amplifier against overloading. It is used wherever no overvoltage protection is available, where the power supply takes place via an overhead power transmission network or an unstabilised battery charger, or where high inductive loads, e.g. motors, are directly switched. The power supply isolation unit acts also as an interface filter. The floating changeover output contact is designed to be connected to a power relay. It is not suitable for high loads.

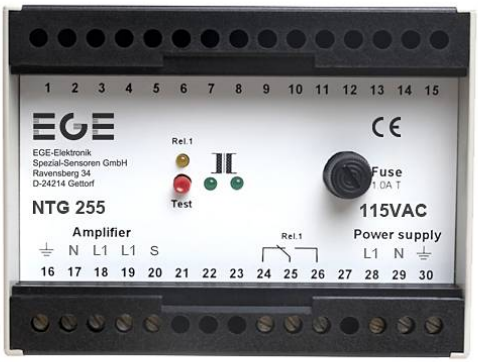

115 V AC - relay changeover

TYPE	NTG 255
Product ID	P81032
Technical Image	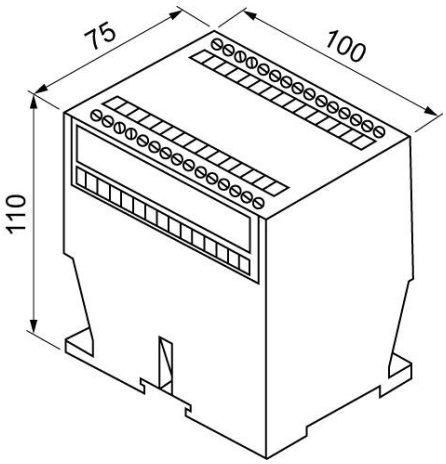

EGE-ELEKTRONIK SPEZIAL-SENSOREN GMBH
TEL. +49 4346 41580 . ege-elektronik.com

Pin Map

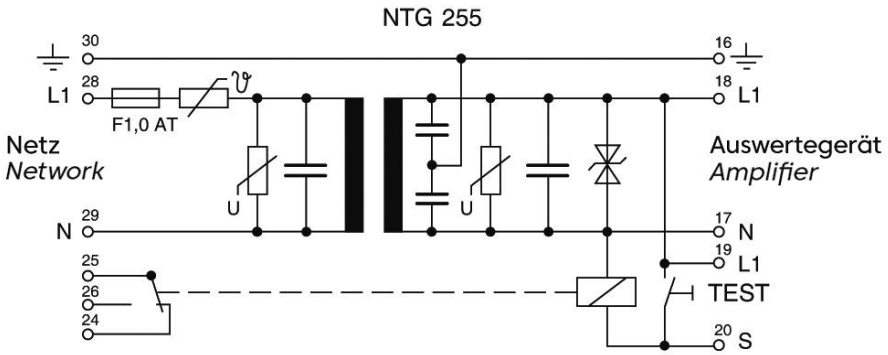

EGE-ELEKTRONIK SPEZIAL-SENSOREN GMBH
TEL. +49 4346 41580 . ege-elektronik.com