Detector coils | MDS 3065-SA

- MDS 3065-SA detector coil 650 mm
- For monitoring conveyed material on transport and conveyor belts
- Coil for metal detector system for the protection of cutters, grinders, rollers and crushers against metal parts in the conveyed material
- Robust design guarantees high stability
- All-weather design - suitable for outdoor use



Type A

TYPE	MDS 3065-SA
Product ID	P81054
Coil type	A
Ambient temperature	-25 °C ... 70 °C
Material housing	aluminium plate, PBT
Protection [EN 60529]	IP 67
Electrical connection	3 m PUR cable with cable plug
Technical Image	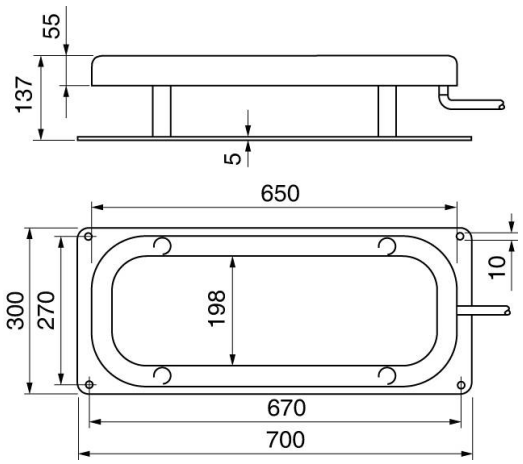

EGE-ELEKTRONIK SPEZIAL-SENSOREN GMBH
TEL. +49 4346 41580 . ege-elektronik.com