Flow rate sensors for inner pipe diameter > 15 mm | SNS 552/2 GAPL

- Flow measurement of waterbased liquids
- Temperature measurement
- Pipe diameter adjustable
- with IO-Link
- Teach-in functions
- Manipulation detection
- Plug-in Installation



TYPE	SNS 552/2 GAPL
Product ID	P11402
Detection range water	5 cm/s ... 300 cm/s
Detection range water l/min, m³/h	depends on pipe diameter (programmable)
Temperature monitoring	0 °C ... 80 °C
Internal pipe diameter	15 mm ... 200 mm
Process connection	M18x1,5
Sensor length L	80 mm
Output S1	PNP-NO / NC, NPN-NO / NC, IO-Link, pulse PNP-NO
Output S2	PNP-NO / NC, NPN-NO / NC, analog output 4...20 mA, input for external control signal
Output	IO-Link
Supply voltage	18 V DC ... 30 V DC
Current consumption max.	120 mA
Switching current max.	150 mA
Ambient temperature	-10 °C ... 60 °C
Medium temperature	0 °C ... 80 °C
Reaction time	<1 (1 ... 8 s)
Programmable functions	hysteresis, window, fault monitoring, pulse output, customized ID, display configuration, analog output, min-/max-/average-value memory
IO-Link-Specifications	V 1.1, COM2, 3,5 ms, SIO-mode supported
Compressive strength	60 bar

EGE-ELEKTRONIK SPEZIAL-SENSOREN GMBH
TEL. +49 4346 41580 . ege-elektronik.com

Material sensor touched by medium	stainless steel AISI 316 L
Material housing	stainless steel AISI 316 Ti, PBT
Protection [EN 60529]	IP 67
Electrical connection	M12 connector
Accessories	IO-Link/USB-Master-Set (Z01216), screw in adapter

Technical Image

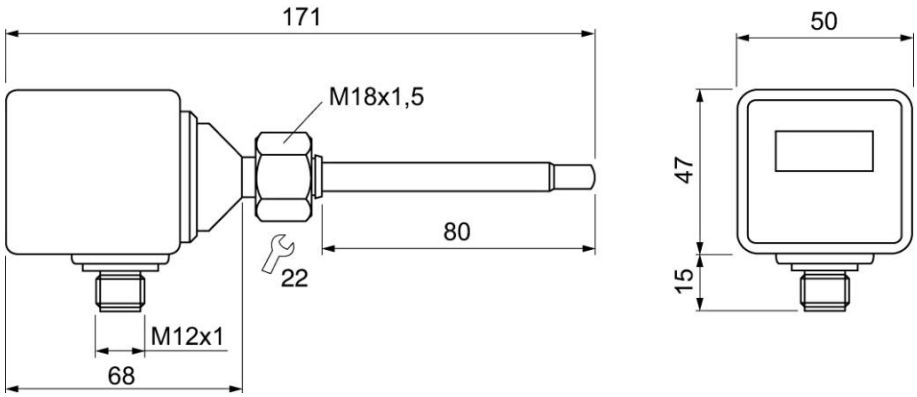

Pin Map

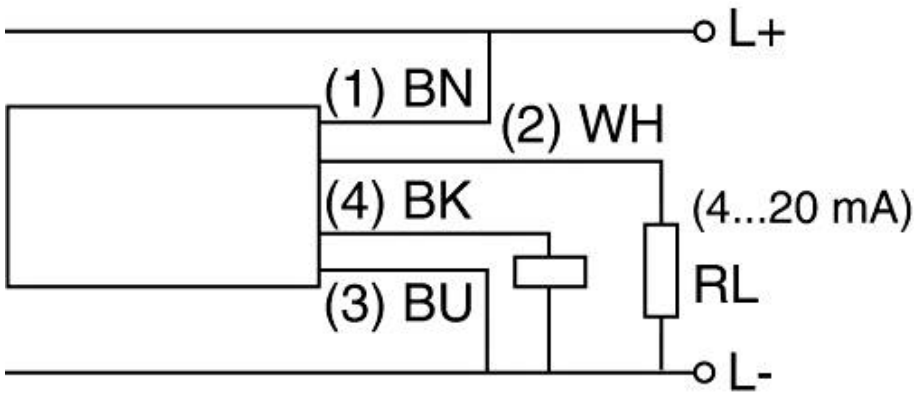

EGE-ELEKTRONIK SPEZIAL-SENSOREN GMBH
TEL. +49 4346 41580 . ege-elektronik.com