Flow rate sensors for fluid media with an end value of 10...100 l/min | SDN 554/3 GPP

- 7- segment flow rate indication
- 2 x switching output PNP NO / NC
- Working range 4...40 l/min
- Flow and temperature monitoring of water and water-glycol mixtures



4...40 l/min - 4x PNP programmable

TYPE	SDN 554/3 GPP
Product ID	P11315
Medium	water, water, water/glycol
Detection range water	4 l/min ... 40 l/min
Detection range water/glycol	4 l/min ... 40 l/min
Temperature monitoring	-10 °C ... 90 °C
Inner diameter d	15 mm
Outer Diameter Pipe mm	18 mm
Process connection	tube fittings for steel tubes accord. to ISO 3304 / DIN 2391
Output	switching output
Output function	PNP-NO
Supply voltage	24 V DC +/- 10 %
Current consumption max.	100 mA
Switching current max.	200 mA (20 °C)
Reverse polarity protection	✓
Ambient temperature	0 °C ... 60 °C
Medium temperature	-10 °C ... 90 °C
Reaction time typ.	1 s ... 8 s
Programmable functions	switching point, hysteresis, switch on delay, four switching points, time on/off delay, glycol percentage, adjustable to reference, averaging, access code, NC/NO
Compressive strength	20 bar

EGE-ELEKTRONIK SPEZIAL-SENSOREN GMBH
TEL. +49 4346 41580 . ege-elektronik.com

Material sensor touched by medium	stainless steel AISI 316 Ti, FPM
Material housing	PBT
Display	7-segment / 3 digits
Protection [EN 60529]	IP 65
Electrical connection	M12 connector
Accessories	mounting plate, adapter SDA G1/2-Ø-18-L068 (Z01176), adapter SDA G1/4-Ø-10-L050 (Z01175)

Technical Image

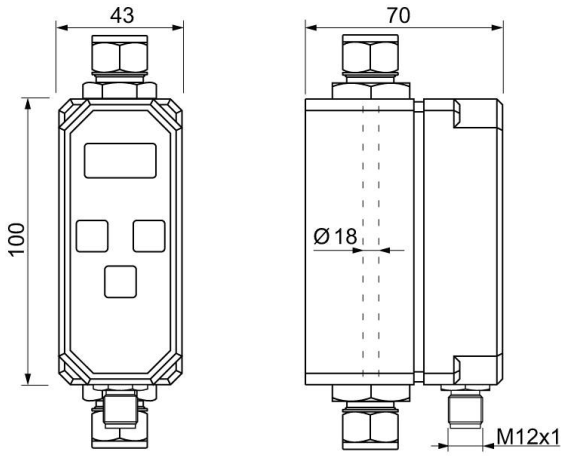

Pin Map

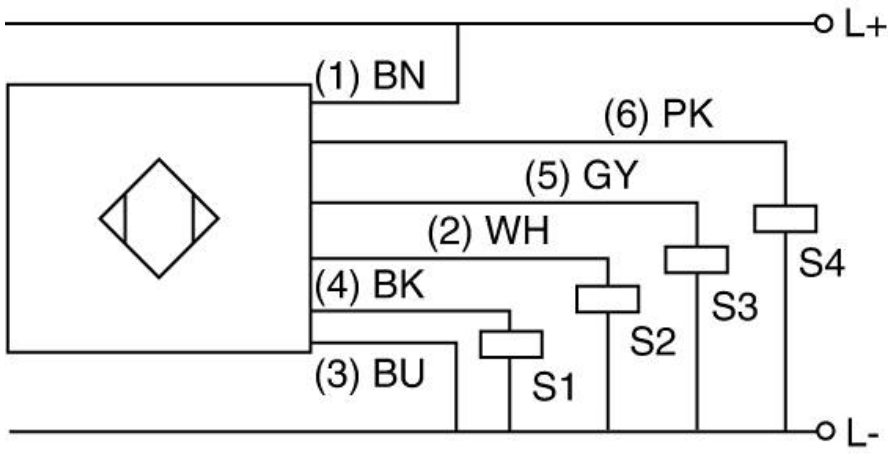

EGE-ELEKTRONIK SPEZIAL-SENSOREN GMBH
TEL. +49 4346 41580 . ege-elektronik.com