Flow rate sensors for fluid media with an end value of 10...100 l/min | SDI 853/1 GAPP

- Flow rate sensor with amplifier
- Magnetic-inductive measuring principle
- For conductive media Measuring range 40 l/min or 80 l/min
- Flow indication with bright red 3-digit 7 segment indication
- Set-up via buttons at the device

0...40 l/min - 24 VDC - outputs PNP programable / pulse and analog 4...20 mA



TYPE	SDI 853/1 GAPP
Product ID	P11322
Medium	water, water, water/glycol, conductive media
Working range electrically conductive media	0 l/min ... 40 l/min
Inner diameter d	8 mm
Outer Diameter Pipe mm	10 mm
Process connection	tube fittings for steel tubes accord. to ISO 3304 / DIN 2391
Output	analog output 4...20 mA, switching output
Output function	PNP-NO / NC
Measurement error	0...5,0 l/min ≤ 0,1 l/min, 5,1...40 l/min ≤ 2 % of meaurement value *
Supply voltage	24 V DC +/- 10 %
Current consumption max.	100 mA
Switching current max.	200 mA
Load RL	200 Ω ... 500 Ω
Reverse polarity protection	✓
Ambient temperature	0 °C ... 60 °C
Medium temperature	5 °C ... 60 °C
Medium conductivity	≥ 10 µS / cm (water ≥ 15 µS / cm)
Reaction time typ.	5 s ... 8 s
Compressive strength	10 bar

EGE-ELEKTRONIK SPEZIAL-SENSOREN GMBH
TEL. +49 4346 41580 . ege-elektronik.com

Material sensor touched by medium	stainless steel AISI 316 Ti, FPM, PVDF
Material housing	PBT
Protection [EN 60529]	IP 65
Electrical connection	M12 connector
Accessories 1	Montageplatte
Accessories 2	cable type SLG, SLW
Accessories 3	Übergangsadapter G 1/4
Accessories 4	Übergangsadapter G 1/2
Note	* reference conditions according to EN 29104

Technical Image

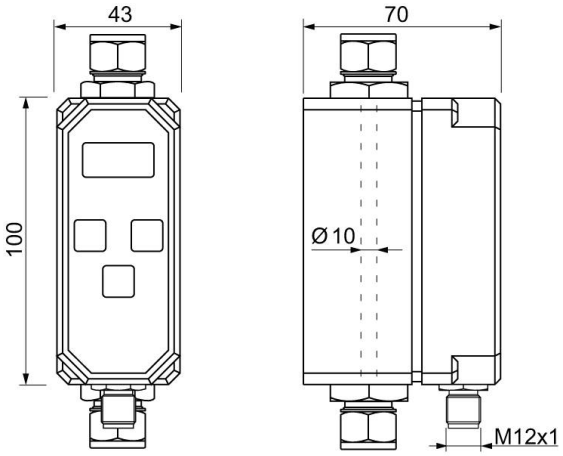

Pin Map

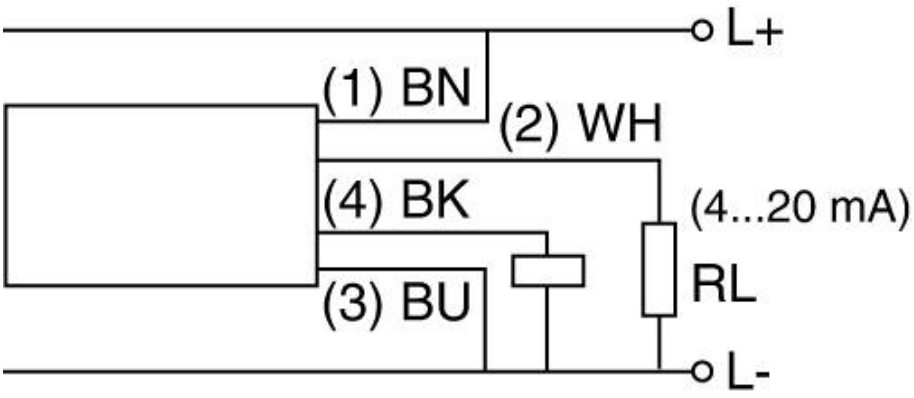

EGE-ELEKTRONIK SPEZIAL-SENSOREN GMBH
TEL. +49 4346 41580 . ege-elektronik.com