Flow rate sensors for fluid media with an end value of 10...100 l/min | SDNB 552/2 GAPL

- Flow rate sensor with IO-Link
- Flow and temperature measurement
- for waterbased media
- Process data can also be used for remote maintenance
- Analog and switching output in SIO-mode available
- Detection range temperature: 0...90 °C



- **Detection range flow: 1,0...20 l/min**
- **Process connection: G1/2**

TYPE	SDNB 552/2 GAPL
Product ID	P11434
Medium	waterbased media
Detection range water	1 l/min ... 20 l/min
Temperature monitoring	0 °C ... 90 °C
Inner diameter d	15 mm
Process connection	G1/2
Output	analog output 4...20 mA, IO-Link, switching output
Output function	PNP-NO / NC
Process data flow	0...200 [l/min x 0,1]
Process data temperature	0...900 [°C x 0,1]
Supply voltage	18 V DC ... 30 V DC
Current consumption max.	40 mA
Ambient temperature	0 °C ... 60 °C
Medium temperature	0 °C ... 90 °C
Reaction time typ.	1 s ... 8 s

EGE-ELEKTRONIK SPEZIAL-SENSOREN GMBH
TEL. +49 4346 41580 . ege-elektronik.com

Programmable functions	range, teach-commandos, window, time on/off delay, averaging, switching output
IO-Link-Specifications	revision 1.1, baud rate COM 2, min. cycle time 3.5 ms, process data 4 byte
Compressive strength	10 bar
Material sensor touched by medium	stainless steel AISI 316 Ti
Material housing	PBT-GF30
Protection [EN 60529]	IP 65
Electrical connection	M12 connector
Accessories	IO-Link/USB-Master-Set (Z01216)

Technical Image

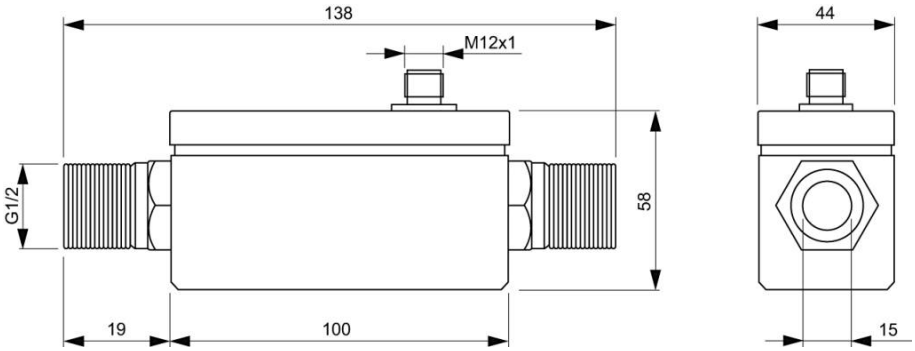

Pin Map

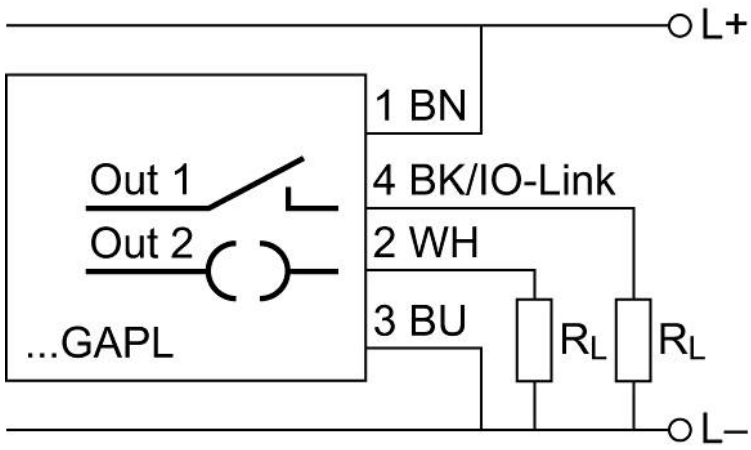

EGE-ELEKTRONIK SPEZIAL-SENSOREN GMBH
TEL. +49 4346 41580 . ege-elektronik.com