Flow rate sensors for fluid media with an end value of 10...100 l/min | SDN 552/2 GPP

- 7-segment flow rate and temperature display
- 2 x switching output PNP NC / NO contact
- Detection range: 2...20 l/min
- Flow and temperature monitoring of water and water-glycol mixtures



2...20 l/min - 2x PNP programmable

TYPE	SDN 552/2 GPP
Product ID	P11294
Medium	water, water, water/glycol
Detection range water	2 l/min ... 20 l/min
Detection range water/glycol	2 l/min ... 20 l/min
Temperature monitoring	-10 °C ... 90 °C
Outer Diameter Pipe mm	15 mm
Process connection	tube fittings for steel tubes accord. to ISO 3304 / DIN 2391
Output	2 x switching output
Output function	PNP-NO / NC
Supply voltage	24 V DC +/- 10 %
Current consumption max.	100 mA
Reverse polarity protection	✓
Ambient temperature	0 °C ... 80 °C
Medium temperature	-10 °C ... 90 °C
Reaction time typ.	1 s ... 8 s
Programmable functions	switching point, two switching points, hysteresis, switch on delay, time on/off delay, glycol percentage, adjustable to reference, averaging, access code, NC/NO
Compressive strength	20 bar
Material sensor touched by medium	stainless steel AISI 316 Ti, FPM
Material housing	PBT

EGE-ELEKTRONIK SPEZIAL-SENSOREN GMBH
TEL. +49 4346 41580 . ege-elektronik.com

Display	7-segment / 3 digits
Protection [EN 60529]	IP 65
Electrical connection	M12 connector
Accessories	mounting plate, adapter SDA G1/2-Ø-18-L068 (Z01176), adapter SDA G1/4-Ø-10-L050 (Z01175)

Technical Image

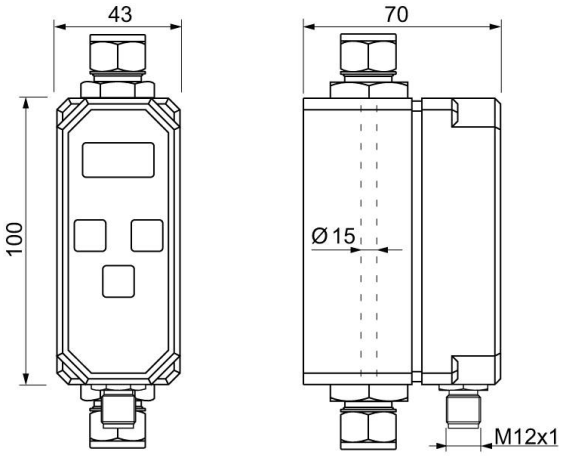

Pin Map

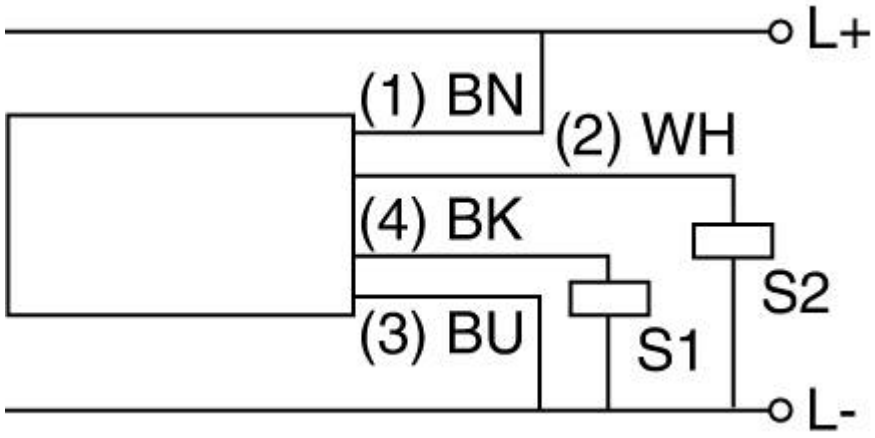

EGE-ELEKTRONIK SPEZIAL-SENSOREN GMBH
TEL. +49 4346 41580 . ege-elektronik.com