# Flow rate sensors for fluid media with an end value of 1...10 l/min | SDB 510 GSP

- Flow rate sensor with amplifier
- Meets the requirements of 3A sanitary standards
- Flow rate monitoring during cleaning processes in the food sector
- Robust housing from glass fibre reinforced PBT
- Indication of the flow rate via LED strip
- Triclamp process connection for DN10

**TriClamp 34 mm - 0,01...6 l/min - PNP-NO**




| | |
|---|---|
| **TYPE** | SDB 510 GSP |
| **Product ID** | P11258 |
| **Medium** | water |
| **Detection range water** | 0.01 l/min ... 6 l/min |
| **Working range** | 0.1 l/min ... 6 l/min |
| **Inner diameter d** | 10 mm |
| **Process connection** | Triclamp Ø 10 mm |
| **Output** | switching output |
| **Output function** | PNP-NO |
| **Supply voltage** | 24 V DC +/- 10 % |
| **Current consumption max.** | 50 mA |
| **Switching current max.** | 200 mA (20 °C) |
| **Reverse polarity protection** | ✓ |
| **Voltage drop max.** | 2.5 V |
| **Ambient temperature** | 0 °C ... 60 °C |
| **Medium temperature** | -20 °C ... 80 °C |
| **Temperature gradient fluids** | 400 K/min |
| **Start-up time typ.** | 5 s ... 15 s |
| **Reaction time typ.** | 1 s(5 s ... 5 s) |
| **Compressive strength** | 20 bar |



EGE-ELEKTRONIK SPEZIAL-SENSOREN GMBH
TEL. +49 4346 41580 . ege-elektronik.com

| | |
|---|---|
| **Material sensor touched by medium** | stainless steel AISI 316 L |
| **Material housing** | PBT |
| **Protection [EN 60529]** | IP 67 |
| **Electrical connection** | M12 connector |
| **Accessories** | connecting cable SLG, SLW, SBG, SBW, mounting bracket |
| **Accessories (in scope of delivery)** | screwdriver |

Technical Image

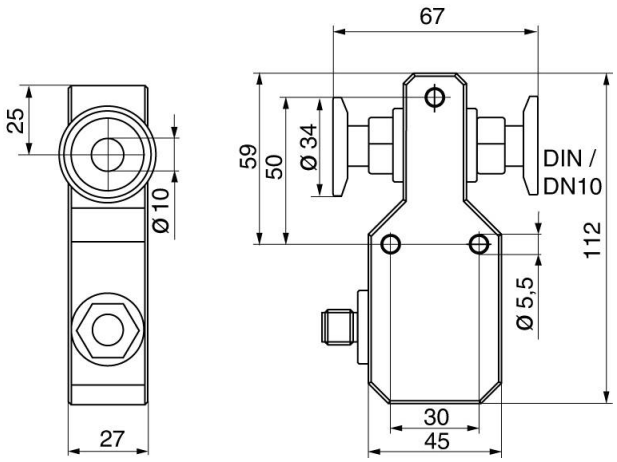


Pin Map

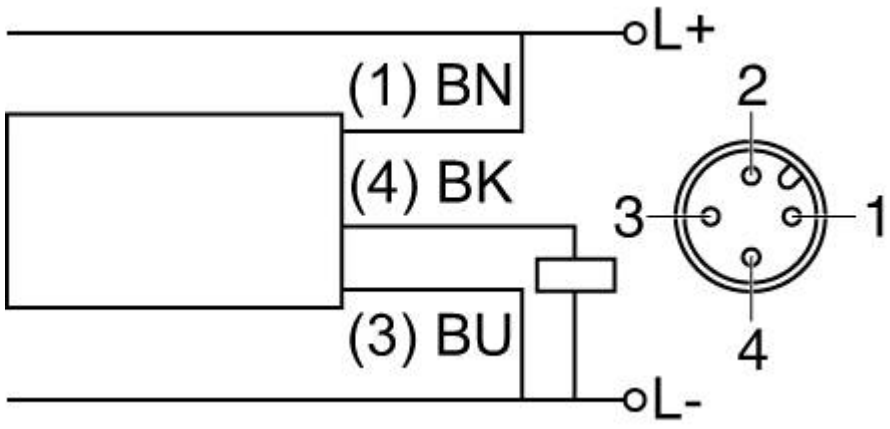




EGE-ELEKTRONIK SPEZIAL-SENSOREN GMBH
TEL. +49 4346 41580 . ege-elektronik.com