Flow rate sensors for fluid media with an end value of 10...100 l/min | SDN 515 GSP

- Flow rate sensor with amplifier
- Robust, compact housing from glass fibre reinforced PBT
- Switching output PNP-NO
- Detection range 2...25 l/min

G1/2 - 2...25 l/min - PNP-NO



TYPE	SDN 515 GSP
Product ID	P11284
Medium	water
Detection range water	2 l/min ... 25 l/min
Working range	3 l/min ... 20 l/min
Inner diameter d	15 mm
Process connection	G1/2
Sensor length L	107.5 mm
Output	switching output
Output function	PNP-NO
Supply voltage	24 V DC +/- 10 %
Current consumption max.	50 mA
Switching current max.	200 mA (20 °C)
Reverse polarity protection	✓
Voltage drop max.	2.5 V
Ambient temperature	0 °C ... 60 °C
Medium temperature	0 °C ... 80 °C
Temperature gradient fluids	400 K/min
Start-up time typ.	5 s ... 15 s
Reaction time typ.	0.5 s ... 10 s
Compressive strength	20 bar

EGE-ELEKTRONIK SPEZIAL-SENSOREN GMBH

TEL. +49 4346 41580 . ege-elektronik.com

Material sensor touched by medium	stainless steel AISI 316 Ti, FPM
Material housing	PBT
Protection [EN 60529]	IP 67
Electrical connection	M12 connector
Accessories	connecting cable SLG, SLW, SBG, SBW, mounting bracket

Technical Image

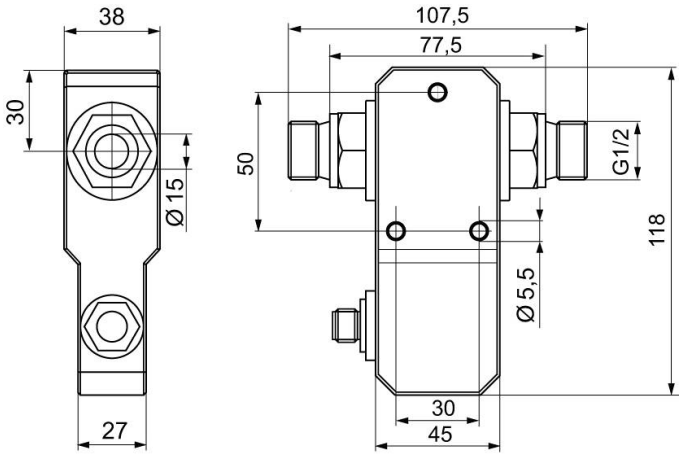

Pin Map

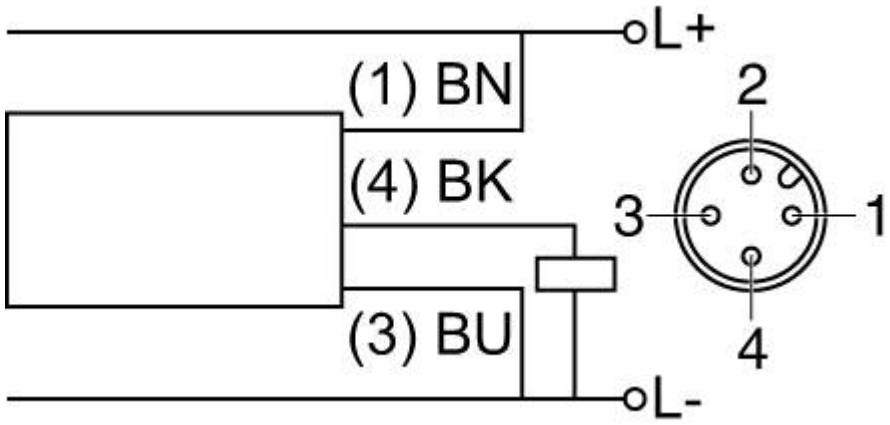

EGE-ELEKTRONIK SPEZIAL-SENSOREN GMBH
TEL. +49 4346 41580 . ege-elektronik.com