Flow rate sensors for fluid media with an end value of 1...10 l/min | SDN 552/6 GPP

- 7 segment flow rate indication
- 2 x switching output PNP NO / NC
- Detection range 0,1...2 l/min l/min
- Flow and temperature monitoring of water

100...2000 ml/min - 2x PNP programmable



TYPE	SDN 552/6 GPP
Product ID	P11347
Medium	water
Detection range water	0.1 l/min ... 2 l/min
Temperature monitoring	0 °C ... 60 °C
Inner diameter d	5.6 mm
Process connection	G1/4
Output	switching output
Output function	PNP-NO
Supply voltage	24 V DC +/- 10 %
Current consumption max.	100 mA
Switching current max.	200 mA (20 °C)
Reverse polarity protection	✓
Ambient temperature	0 °C ... 60 °C
Medium temperature	0 °C ... 60 °C
Reaction time typ.	1 s ... 8 s
Programmable functions	switching point, two switching points, hysteresis, switch on delay, time on/off delay, adjustable to reference, averaging, access code, NC/NO
Compressive strength	10 bar
Material sensor touched by medium	stainless steel AISI 316 Ti, FPM
Material housing	PBT

EGE-ELEKTRONIK SPEZIAL-SENSOREN GMBH
TEL. +49 4346 41580 . ege-elektronik.com

Display	7-segment / 3 digits
Protection [EN 60529]	IP 65
Electrical connection	M12 connector
Accessories	mounting plate, connecting cable SLG, SLW

Technical Image

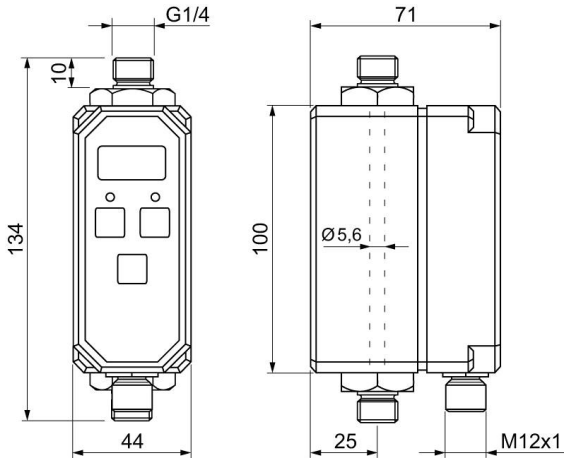

Pin Map

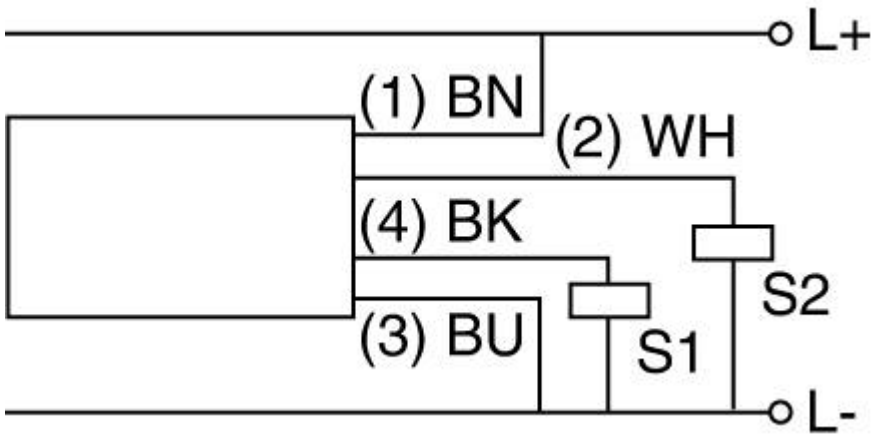

EGE-ELEKTRONIK SPEZIAL-SENSOREN GMBH
TEL. +49 4346 41580 . ege-elektronik.com