Flow rate sensors for fluid media with an end value of 1...10 l/min | SDNC 503 GAPL

- Robust, compact housing from glass fibre reinforced PBT
- Assembly in areas with minimum space
- Set-up using IO-Link master
- Flow rate and temperature measurement of aqueous media in dosing applications

G1/4 - 0,05...2,0 l/min water - 24 VDC - output PNP programable / Analog-Ausgang 4...20 mA / pulse / IO-Link



TYPE	SDNC 503 GAPL
Product ID	P11375
Medium	water
Detection range water	0.05 l/min ... 2 l/min
Temperature monitoring	0 °C ... 60 °C
Inner diameter d	3.6 mm
Process connection	G1/4
Output	analog output 4...20 mA, IO-Link, pulse output, switching output
Output function	PNP-NO / NC - pulse output
Process data flow	0...200 [l/min x 0.01]
Process data temperature	0...600 [°C x 0,1]
Supply voltage	18 V DC ... 30 V DC
Current consumption max.	40 mA
Switching current max.	150 mA
Load RL	200 Ω ... 500 Ω
Reverse polarity protection	✓
Ambient temperature	0 °C ... 60 °C
Medium temperature	0 °C ... 60 °C
Reaction time typ.	0.5 s ... 10 s
Programmable functions	switching points, output functions, range, average value, teach-commandos
IO-Link-Specifications	revision 1.1, baud rate COM 2, min. cycle time 3.5 ms, process data 4 byte

EGE-ELEKTRONIK SPEZIAL-SENSOREN GMBH

TEL. +49 4346 41580 . ege-elektronik.com

Compressive strength	10 bar
Material sensor touched by medium	stainless steel AISI 316 Ti
Material housing	stainless steel AISI 303, brass, PA, PBT
Protection [EN 60529]	IP 67
Electrical connection	M12 connector
Accessories	connecting cable SLW 4-2 (Z00446), mounting bracket (Z01215), IO-Link/USB-Master-Set (Z01216)
Accessories (in scope of delivery)	screw adapter

Technical Image

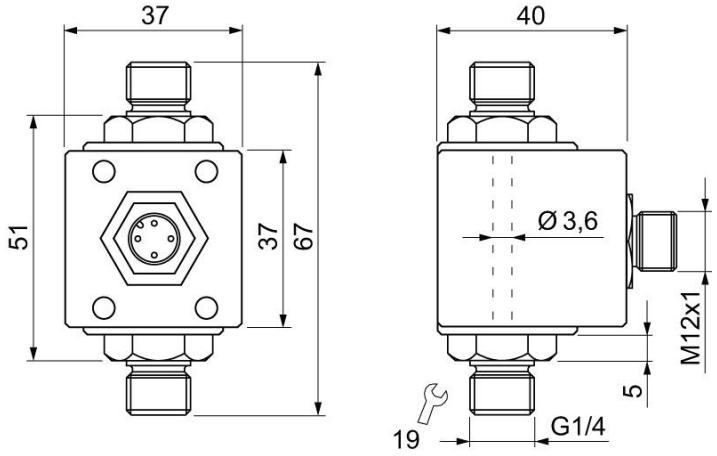

Pin Map

