# Flow rate sensors for fluid media with an end value of 0...1 l/min | SDN 501/1 GSP-DYN

- Flow rate sensor with amplifier
- Robust, compact housing from glass fibre reinforced PBT
- For the detection of micro flow pulses

**G1/4 -micro flow pulses from 0,02 ml/100 ms - PNP-NO**



| | |
|---|---|
| **TYPE** | SDN 501/1 GSP-DYN |
| **Product ID** | P11396 |
| **Medium** | water, oil |
| **Detection range water ml/100ms min.** | 0.02 ml/100ms |
| **Working range water min.** | 0.02 ml/100ms |
| **Process connection** | G1/4 |
| **Sensor length L** | 68 mm |
| **Output** | switching output |
| **Output function** | PNP-NO |
| **Turn off delay** | 0,5...10 s adjustable |
| **Supply voltage** | 24 V DC +/- 20 % |
| **Current consumption max.** | 50 mA |
| **Switching current max.** | 200 mA (20 °C) |
| **Reverse polarity protection** | ✓ |
| **Voltage drop max.** | 2.5 V |
| **Ambient temperature** | 0 °C ... 60 °C |
| **Medium temperature** | 0 °C ... 80 °C |
| **Start-up time typ.** | 15 s |
| **Reaction time typ.** | 0.1 s(0 s ... 0.1 s) |
| **Compressive strength** | 20 bar |



**EGE-ELEKTRONIK SPEZIAL-SENSOREN GMBH**
TEL. +49 4346 41580 . ege-elektronik.com

| | |
|---|---|
| **Material sensor touched by medium** | stainless steel AISI 316 Ti |
| **Material housing** | stainless steel AISI 303, brass, PA, PBT |
| **Protection [EN 60529]** | IP 67 |
| **Electrical connection** | M12 connector |
| **Accessories** | connecting cable SLG, SLW, SBG, SBW, mounting bracket |
| **Accessories (in scope of delivery)** | 4 x gasket G1/4 AFM 34, Screwdriver |

Technical Image

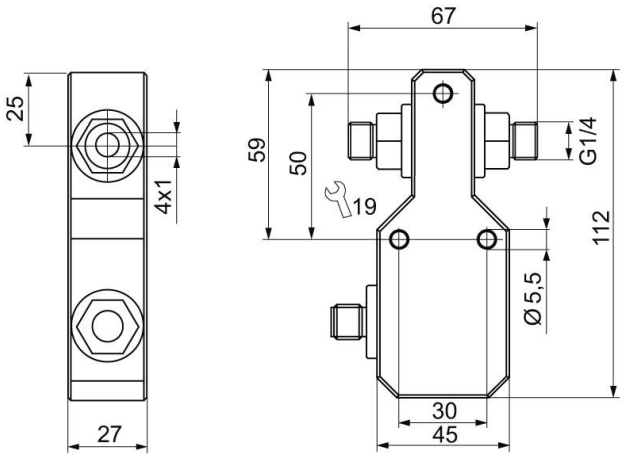


Pin Map

