Flow rate sensors for fluid media with an end value of 0...1 l/min | SDN 503 GSP

- Flow rate sensor with amplifier
- Robust, compact housing from glass fibre reinforced PBT

Tube connection 4 mm - 0,1...500 ml/min - PNP NO



TYPE	SDN 503 GSP
Product ID	P11265
Medium	water
Detection range	0.1 ml/min ... 500 ml/min
Working range	1 ml/min ... 200 ml/min
Inner diameter d	3.6 mm
Process connection	Rohrstutzen Ø 4 mm
Sensor length L	125 mm
Output	switching output
Output function	PNP-NO
Supply voltage	24 V DC +/- 10 %
Current consumption max.	50 mA
Switching current max.	200 mA (20 °C)
Reverse polarity protection	✓
Voltage drop max.	2.5 V
Ambient temperature	0 °C ... 60 °C
Medium temperature	0 °C ... 60 °C
Temperature gradient fluids	400 K/min
Start-up time typ.	5 s ... 60 s
Reaction time typ.	0.5 s ... 10 s
Compressive strength	1 bar

EGE-ELEKTRONIK SPEZIAL-SENSOREN GMBH
TEL. +49 4346 41580 . ege-elektronik.com

Material sensor touched by medium	stainless steel AISI 316 Ti
Material housing	PBT
Protection [EN 60529]	IP 67
Electrical connection	M12 connector
Accessories	connecting cable SLG, SLW, SBG, SBW, mounting bracket
Accessories (in scope of delivery)	screwdriver

Technical Image

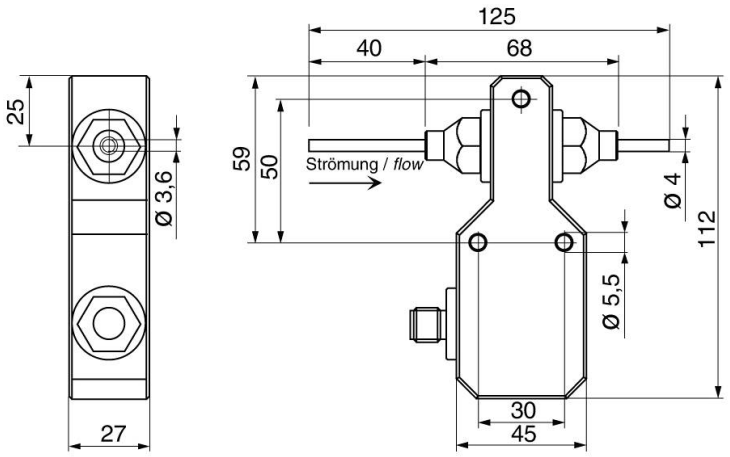

Pin Map

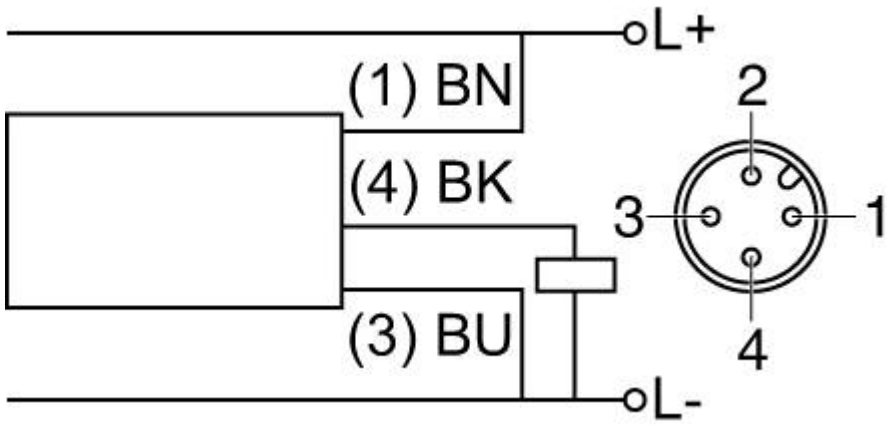

EGE-ELEKTRONIK SPEZIAL-SENSOREN GMBH
TEL. +49 4346 41580 . ege-elektronik.com