# Amplifiers for flow sensors | SKZ 400 WR

- Measuring and evaluation electronics for sensors of the ST/STK 400 series
- Display of the current flow condition with 6 LEDs
- Intuitive limit value adjustment with potentiometer
- Design for mounting on a top hat rail
- Powerful relay output
- Adjustable temperature monitoring and switch-off time delay




**230 VAC**

| | |
|---|---|
| **TYPE** | SKZ 400 WR |
| **Product ID** | P10501 |
| **Temperature monitoring** | -20 °C ... 100 °C |
| **Output** | switching output |
| **Output function** | 2x relay / change-over |
| **Turn off delay** | 0...25 s adjustable |
| **Supply voltage** | 230 V AC +/- 10% |
| **Switching voltage max.** | 250 V AC / 60 V DC |
| **Switching current max.** | 4 A AC / 4 A DC |
| **Switching power max.** | 1000 VA / 60 W |
| **Ambient temperature** | -20 °C ... 60 °C |
| **Display** | LED |
| **Protection [EN 60529] terminal** | IP 20 |
| **Protection [EN 60529] housing** | IP 40 |
| **Electrical connection** | terminal screws |
| **Accessories (in scope of delivery)** | screwdriver |
| **Amplifier for probe** | STA..., STB..., STC..., STD..., STK..., ST... (none Ex), LTZ |


EGE-ELEKTRONIK SPEZIAL-SENSOREN GMBH
TEL. +49 4346 41580 . ege-elektronik.com

Technical Image

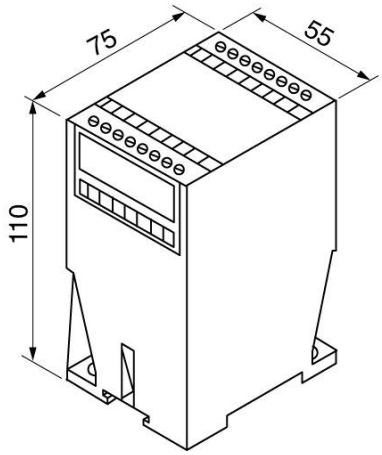


Pin Map

