Air Flow Sensors with integrated amplifier for explosive areas | LC 518 GSP-Ex22

- Flow monitoring of gaseous media in hazardous areas
- Installation in zone 2 (gas) and zone 22 (dust)
- Switching point adjustable on site during operation
- Stainless steel housing

M18x1 - sensor length 80 mm - PNP normally open contact



TYPE	LC 518 GSP-Ex22
Product ID	P11404
Thread/sleeve	M18x1
Medium	gaseous media
Detection range air	0.5 m/s ... 20 m/s
Sensor length L	80 mm
Output	switching output
Output function	PNP-NO
Supply voltage	24 V DC +/- 10 %
Current consumption max.	35 mA
Switching current max.	200 mA
Ex area uf use	Zone 2, Zone 22
Certificate of conformity	EGE 21.0010 X
ATEX marking gas	Ex II 3 G Ex ic mc IIC T4...T3 Gc
Ex Marking ATEX Dust	Ex II 3 D Ex ic mc IIIC T135 °C Dc
Temperature range in T4	-10 °C ... 60 °C
Temperature range in T3	-10 °C ... 60 °C
Temperature range dust-Ex	-10 °C ... 60 °C
Start-up time typ.	20 s
Reaction time typ.	5 s
Compressive strength	1 bar

EGE-ELEKTRONIK SPEZIAL-SENSOREN GMBH
TEL. +49 4346 41580 . ege-elektronik.com

Material housing	stainless steel AISI 316 Ti, ceramics, PBT-GF30, PUR
Display flow	3-colour-illuminated dot red / yellow / green
Protection [EN 60529]	IP 67
Electrical connection	2 m PUR-cable 3x0.5 mm²

Technical Image

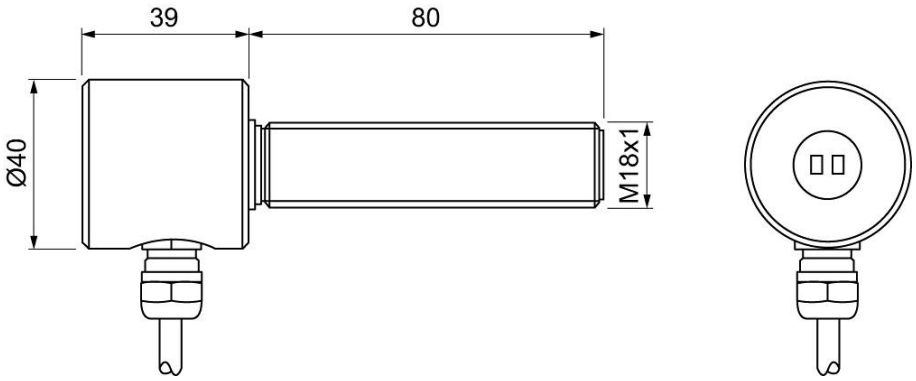

Pin Map

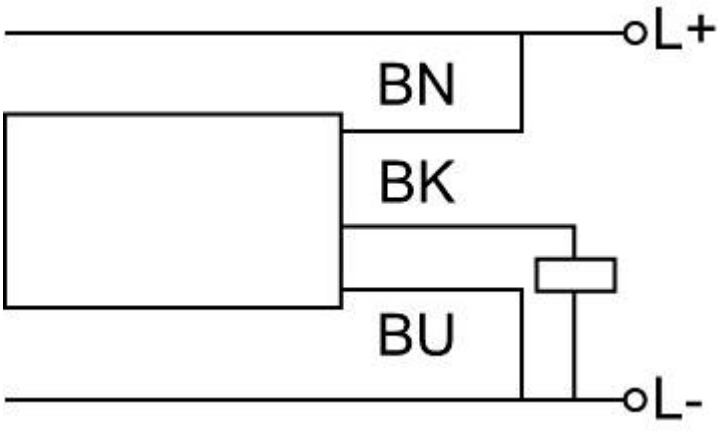

EGE-ELEKTRONIK SPEZIAL-SENSOREN GMBH
TEL. +49 4346 41580 . ege-elektronik.com