Flow rate sensors for fluid media with an end value of 0...1 l/min | SD 504 S

- Flow rate sensor without amplifier
- Robust housing from glass fibre reinforced PBT
- No parts protruding into the flow
- Design for connection to amplifier series SKM 500
- Flow rate monitoring in cooling circuits with small pipe diameters
- Flow rate monitoring in the cooling circuit of melting furnaces
- Detection range: 1....1000 ml/min



G1/4 - 0,001...1 l/min - M12 connector

TYPE	SD 504 S
Product ID	P11251
Medium	water
Detection range	1 ml/min ... 1000 ml/min
Inner diameter d	4 mm
Process connection	G1/4
Sensor length L	67 mm
Ambient temperature	-20 °C ... 70 °C
Medium temperature	0 °C ... 80 °C
Temperature gradient fluids	300 K/min
Start-up time typ.	5 s
Reaction time typ.	1 s(0.5 s ... 10 s)
Compressive strength	20 bar
Material sensor touched by medium	stainless steel AISI 316 Ti
Material housing	PBT
Protection [EN 60529]	IP 67
Electrical connection	M12 connector
Accessories (in scope of delivery)	4 x gasket G1/4 AFM 34
Associated amplifiers	SKM..., SKZ...

EGE-ELEKTRONIK SPEZIAL-SENSOREN GMBH
TEL. +49 4346 41580 . ege-elektronik.com

Technical Image

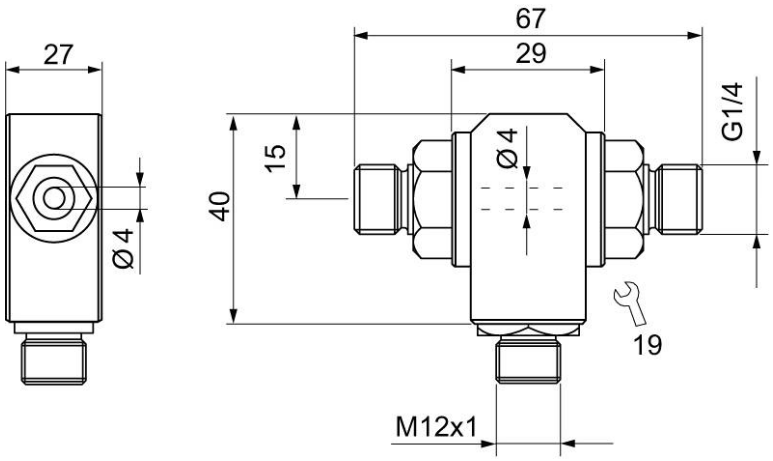

Pin Map

