Sensors for measuring the air flow rate of gaseous media | LDN 510 GSP

- For monitoring of the flow speed of gaseous media in the range of 0,2...60 m/s
- Wear-free, no moving parts
- Monitoring of compressed air supllies
- Without loss of pressure, no constrictions in measuring pipe
- With PNP switching output

G1/4 - 0,2...60 m/s - PNP-NO



TYPE	LDN 510 GSP
Product ID	P11299
Medium	air
Detection range air	0.2 m/s ... 60 m/s
Working range	0.5 m/s ... 40 m/s
Inner diameter d	9 mm
Process connection	G1/4
Sensor length L	68 mm
Output	switching output
Output function	PNP-NO
Supply voltage	24 V DC +/- 10 %
Current consumption max.	50 mA
Switching current max.	200 mA (20 °C)
Reverse polarity protection	✓
Voltage drop max.	2.5 V
Ambient temperature	0 °C ... 60 °C
Medium temperature	-20 °C ... 80 °C
Temperature gradient gaseous media	20 K/min
Start-up time typ.	10 s ... 30 s
Reaction time typ.	1 s ... 20 s

EGE-ELEKTRONIK SPEZIAL-SENSOREN GMBH
TEL. +49 4346 41580 . ege-elektronik.com

Compressive strength	20 bar
Material sensor touched by medium	stainless steel AISI 316 Ti
Material housing	PBT
Protection [EN 60529]	IP 67
Electrical connection	M12 connector
Accessories	connecting cable SLG, SLW, SBG, SBW, mounting bracket
Accessories (in scope of delivery)	4 x gasket G1/4 AFM 34, Screwdriver

Technical Image

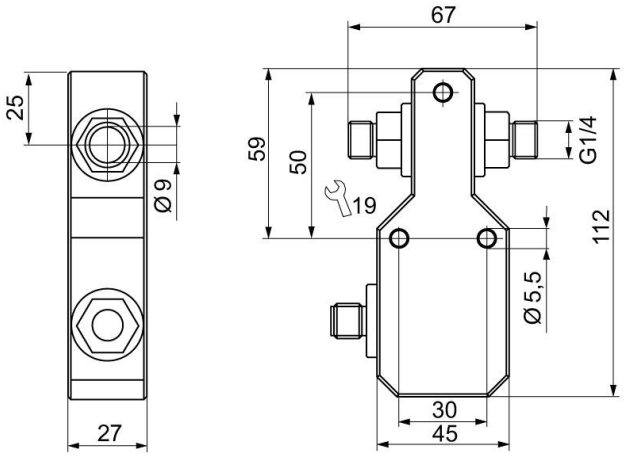

Pin Map

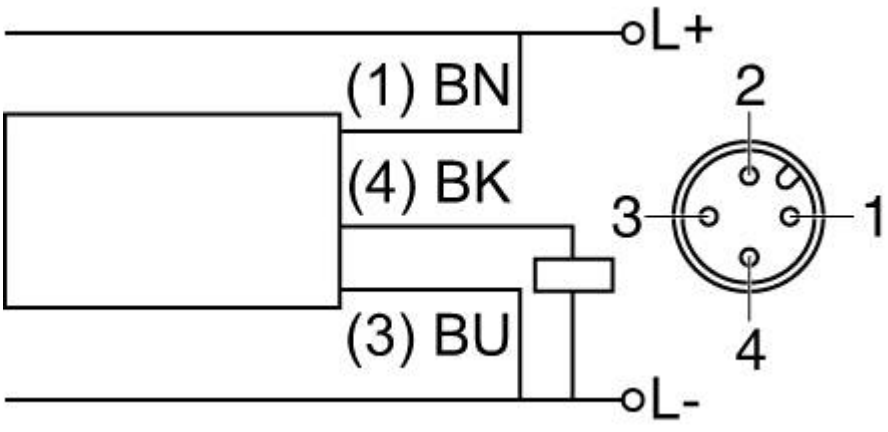

EGE-ELEKTRONIK SPEZIAL-SENSOREN GMBH
TEL. +49 4346 41580 . ege-elektronik.com