Amplifiers for Ex flow sensors | SZAb 400 EX-WR230

- ATEX amplifier series 400 for Ex flow sensors ST.../STS...
- Assembly on clamping rail in the control cabinet
- Visualisation of the flow rate via LED strip
- To activate and deactivate fans and warning devices
- To signal flow failures

230 VAC - output relay



TYPE	SZAb 400 EX-WR230
Product ID	P11400
Output	switching output
Output function	relay / change-over
Turn off delay	0...25 s
Supply voltage	230 V AC +/- 10%
Switching voltage max.	250 V AC / 60 V DC / 24 V DC
Switching current max.	4 A AC / 0,8 A DC / 4 A DC
Switching Load	cos φ > 0,7 ; L/R <200 ms
ATEX Certificate	EPS 19 ATEX 1 009
IECEx Certificate	IECEx EPS 19.0001
ATEX marking gas	Ex II (1) G [Ex ia Ga] IIC
ATEX Marking dust	Ex II (1) D [Ex ia Da] IIIC
IECEx marking gas	[Ex ia Ga] IIC
IECEx marking dust	[Ex ia Da] IIIC
Maximum values	Uo = 13.65 V / Io = 200 mA / Po = 683 mW; IIC: Co = 0.35 µF / Lo = 1.1 mH; IIB: Co = 1.8 µF / Lo = 6.2 mH; IIA: Co = 5.7 µF / Lo = 11.0 mH
Ambient temperature	-20 °C ... 60 °C
Protection [EN 60529] terminal	IP 20
Protection [EN 60529] housing	IP 20
Electrical connection	terminal screws

EGE-ELEKTRONIK SPEZIAL-SENSOREN GMBH
TEL. +49 4346 41580 . ege-elektronik.com

Accessories (in scope of delivery)	screwdriver
Technical Image	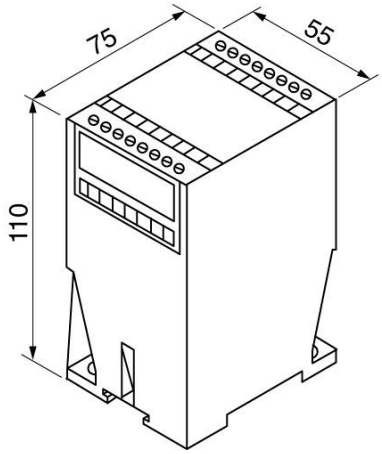
Pin Map	