Air flow sensors without amplifier for explosive areas | STS 215 S

- ATEX screw-in sensors for air flow monitoring
- Design with one measuring pins
- Designs in device category 1 or 1/2
- Use in dust- or gas-explosive areas
- Flow monitoring for fans
- Flow monitoring in exhaust air ducts in Ex areas

G1/2 - sensor length 48 mm - Ex-Zone 0/20 - M12 connector



TYPE	STS 215 S
Product ID	P11207
Medium	air
Detection range air	2 m/s ... 25 m/s
Process connection	G1/2
Sensor length L	48 mm
Output	output with separate amplifier
Ex area uf use	installation in partition wall Zone 0/1, Zone 0, Zone 20
ATEX Certificate	TÜV 98 ATEX 1298 X
Marking gas Ex for partition wall mounting	Ex II 1/2 G Ex ia IIC T6...T3 Ga/Gb
ATEX marking gas	Ex II 1 G Ex ia IIC T6...T3 Ga
ATEX Marking dust	Ex II 1 D Ex ia IIIC T130°C Da
Temperature range in T6	-20 °C ... 35 °C
Temperature range in T5	-20 °C ... 50 °C
Temperature range in T4	-20 °C ... 85 °C
Temperature range in T3	-20 °C ... 85 °C
Temperature range dust-Ex	-20 °C ... 85 °C
Maximum values	Ui = 13.65 V / Ii = 200 mA / Pi = 0.69 W / Ci = 0.45 nF / Li = 1.80 µH
Start-up time typ.	5 s ... 20 s
Reaction time typ.	3 s(2 s ... 30 s)

EGE-ELEKTRONIK SPEZIAL-SENSOREN GMBH
TEL. +49 4346 41580 . ege-elektronik.com

Compressive strength	10 bar
Material sensor touched by medium	stainless steel AISI 316 Ti
Material housing	stainless steel AISI 316 Ti, brass, PA
Protection [EN 60529]	IP 67
Electrical connection	M12 connector
Accessories (in scope of delivery)	2 x gasket G1/2 AFM 34
Associated amplifiers	SZAb 400 EX-GR, SZAb 400 EX-WR115, SZAb 400 EX-WR230, SZAb 400 EX-GA

Technical Image

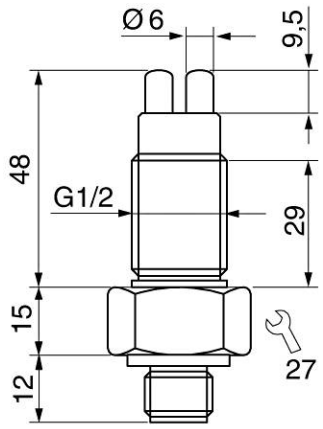

Pin Map

