# Air flow sensors with integrated amplifier | LN 520 GPLS

- Plug-in sensor for air flow monitoring
- Gaseous media
- Temperature and flow value as process data
- 6-colour light indicator fordevice status
- Air flow monitoring in exhaust systems
- Flow monitoring for fans
- Filter state monitoring
- Flow monitoring in air cooling circuits
- IO-Link and  Smart Sensor Profile



**Cylindrical smooth design - IO-Link - Smart Sensor Profile**

| | |
|---|---|
| **TYPE** | LN 520 GPLS |
| **Product ID** | P11437 |
| **Medium** | air |
| **Detection range air** | 0.5 m/s ... 15 m/s |
| **Detection range °C** | -20 °C ... 70 °C |
| **Process connection** | Ø 20 mm |
| **Output** | IO-Link |
| **Output function** | PNP-NO / NC |
| **Process Data Airflow** | 0...1000 [% x 0.1] |
| **Process data temperature** | -200...700 [°C x 0,1] |
| **Supply voltage** | 18 V DC ... 30 V DC |
| **Current consumption max.** | 40 mA |
| **Switching current max.** | 150 mA |
| **Ambient temperature** | -20 °C ... 70 °C |
| **Start-up time** | 20 ... 40 s |
| **Reaction time (flow change)** | 2...20 |
| **Reaction time (temperature change)** | < 15 |
| **Material sensor touched by medium** | BR-Ni, PBT |


EGE-ELEKTRONIK SPEZIAL-SENSOREN GMBH
TEL. +49 4346 41580 . ege-elektronik.com

| | |
|---|---|
| **Material housing** | brass-Ni, PBT |
| **Display flow** | 6-colour-illuminated LED yellow, green, cyan, violet, blue |
| **Protection [EN 60529]** | IP 67 |
| **Electrical connection** | 2 m PVC-cable 3x0.34 mm² |
| **Accessories** | Flange Ø 20 mm (Z01106) |

Technical Image

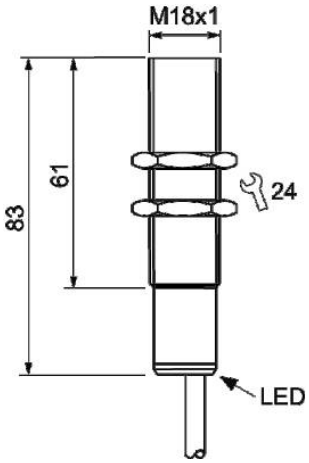


Pin Map

