Air flow sensors with integrated amplifier | LG 518 GPLS

- Screw-in sensor for air flow monitoring
- Gaseous media
- Temperature and flow value as process data
- 6-colour light indicator fordevice status
- Air flow monitoring in exhaust systems
- Flow monitoring for fans
- Filter state monitoring
- Flow monitoring in air cooling circuits
- IO-Link and Smart Sensor Profile



M18x1 - IO-Link - Smart Sensor Profile

TYPE	LG 518 GPLS
Product ID	P11438
Medium	air
Detection range air	0.5 m/s ... 15 m/s
Detection range °C	-20 °C ... 70 °C
Process connection	M18x1
Output	IO-Link
Output function	PNP-NO / NC
Process Data Airflow	0...1000 [% x 0.1]
Process data temperature	-200...700 [°C x 0,1]
Supply voltage	18 V DC ... 30 V DC
Current consumption max.	40 mA
Switching current max.	200 mA
Ambient temperature	-20 °C ... 70 °C
Start-up time	20 ... 40 s
Reaction time (flow change)	2...20
Reaction time (temperature change)	< 15

EGE-ELEKTRONIK SPEZIAL-SENSOREN GMBH
TEL. +49 4346 41580 . ege-elektronik.com

Material sensor touched by medium	BR-Ni, PBT
Material housing	brass-Ni, PBT
Display flow	6-colour-illuminated LED yellow, green, cyan, violet, blue
Protection [EN 60529]	IP 67
Electrical connection	2 m PVC-cable 3x0.34 mm²

Technical Image

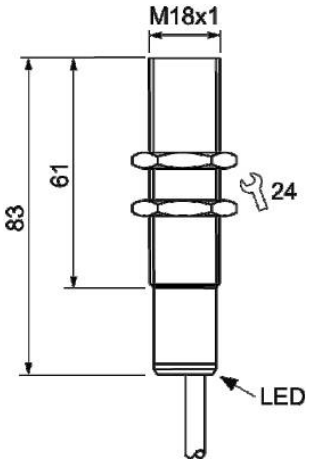

Pin Map

