Sensors for explosive areas without amplifier for liquid media | STS 111 KH-140

- DN25/PN40 flange sensor for flow monitoring in liquid media
- ATEX approval for operation in Ex areas Zone 0 and Zone 1
- ATEX approval for operation in Ex separation walls Zone 0/Zone 1
- Medium temperature up to 120 °C
- Corrosion-proof stainless steel housing AISI 316 Ti
- Immersion depth 80 mm from upper edge of flange
- 2 m fixed cable PUR
- Flange acc. to EN 1092-1/05 A
- Needs ATEX certified amplifier with analogue or switching output
- Observe special conditions for safe use



flange DN25/PN40 - sensor length 140 mm - Ex-Zone 0/20 - extended temperature range up to 120° - FEP-cable

TYPE	STS 111 KH-140
Product ID	P11420
Medium	water, oil
Detection range water	1 cm/s ... 100 cm/s
Detection range Oil	3 cm/s ... 200 cm/s
Process connection	DN25/PN40 (EN 1092-1/05 A)
Sensor length L	140 mm
Ex area uf use	installation in partition wall Zone 0/1, Zone 0, Zone 20
ATEX Certificate	TÜV 98 ATEX 1298 X
Marking gas Ex for partition wall mounting	Ex II 1/2 G Ex ia IIC T6...T3 Ga/Gb
ATEX marking gas	Ex II 1 G Ex ia IIC T6...T3 Ga
ATEX Marking dust	Ex II 1 D Ex ia IIIC T125°C Da
Temperature range in T6	-20 °C ... 40 °C
Temperature range in T5	-20 °C ... 55 °C
Temperature range in T4	-20 °C ... 90 °C

EGE-ELEKTRONIK SPEZIAL-SENSOREN GMBH

TEL. +49 4346 41580 . ege-elektronik.com

Temperature range in T3	-20 °C ... 120 °C
Temperature range dust-Ex	-20 °C ... 85 °C
Maximum values	Ui = 13.65 V / Ii = 200 mA / Pi = 0.69 W / Ci = 0.45 nF / Li = 1.80 µH
Start-up time typ.	8 s(2 s ... 18 s)
Reaction time typ.	2 s(1 s ... 13 s)
Compressive strength	60 bar
Material sensor touched by medium	stainless steel AISI 316 Ti
Material housing	stainless steel AISI 316 Ti
Material Flange	AISI 316 Ti
Protection [EN 60529]	IP 67
Electrical connection	2 m FEP-cable 4x0.25 mm²
Associated amplifiers	SZAb 400 EX-GR, SZAb 400 EX-WR115, SZAb 400 EX-WR230, SZAb 400 EX-GA

Technical Image

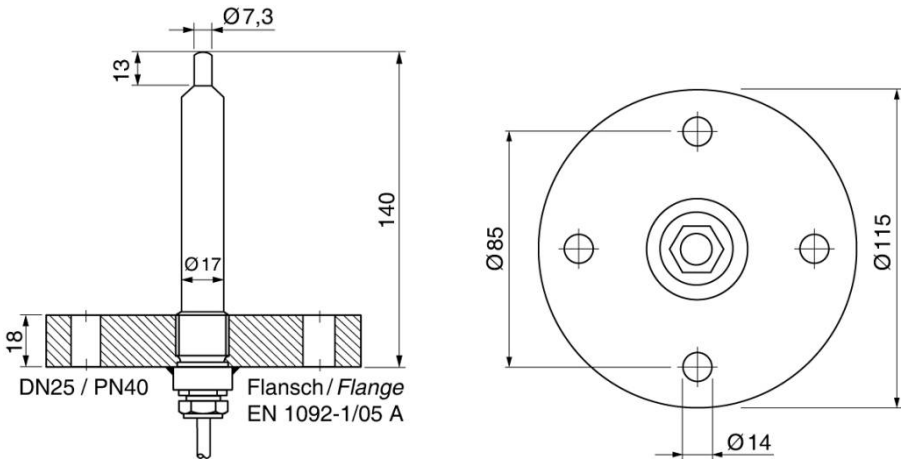

Pin Map

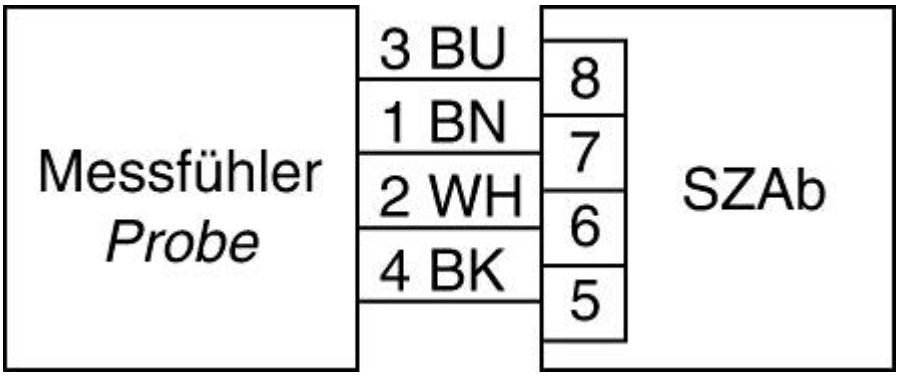

EGE-ELEKTRONIK SPEZIAL-SENSOREN GMBH
TEL. +49 4346 41580 . ege-elektronik.com