# Air flow sensors with integrated amplifier | LN 450 GSP-S

- Air flow sensor with amplifier
- Plug-in sensor with 2 measuring pins
- Gaseous media
- DC or AC design
- Switching output
- Flow monitoring in supply and exhaust air ducts

**24 VDC - output PNP NO - M12 plug system**



| | |
|---|---|
| **TYPE** | LN 450 GSP-S |
| **Product ID** | P11137 |
| **Medium** | air, non-explosive gas |
| **Detection range air** | 0.5 m/s ... 30 m/s |
| **Process connection** | G1 |
| **Output** | switching output |
| **Output function** | PNP-NO |
| **Supply voltage** | 24 V DC +/- 20 % |
| **Current consumption max.** | 60 mA |
| **Switching current max.** | 400 mA (20 °C) |
| **Reverse polarity protection** | ✓ |
| **Ambient temperature** | -20 °C ... 70 °C |
| **Medium temperature** | -20 °C ... 80 °C |
| **Temperature gradient gaseous media** | 20 K/min |
| **Start-up time** | 10 ... 90 s |
| **Reaction time** | 2 ... 30 s |
| **Compressive strength** | 3 bar |
| **Material sensor touched by medium** | delrin, stainless steel AISI 303 |
| **Material housing** | PBT |
| **Protection [EN 60529]** | IP 67 |



EGE-ELEKTRONIK SPEZIAL-SENSOREN GMBH
TEL. +49 4346 41580 . ege-elektronik.com

| | |
|---|---|
| **Electrical connection** | M12 connector |
| **Accessories** | thread sleeve A502 (Z01034), thread sleeve A503 (Z01035), connecting cable SLG, SLW, thread sleeve A501 Z01033 |
| Technical Image | 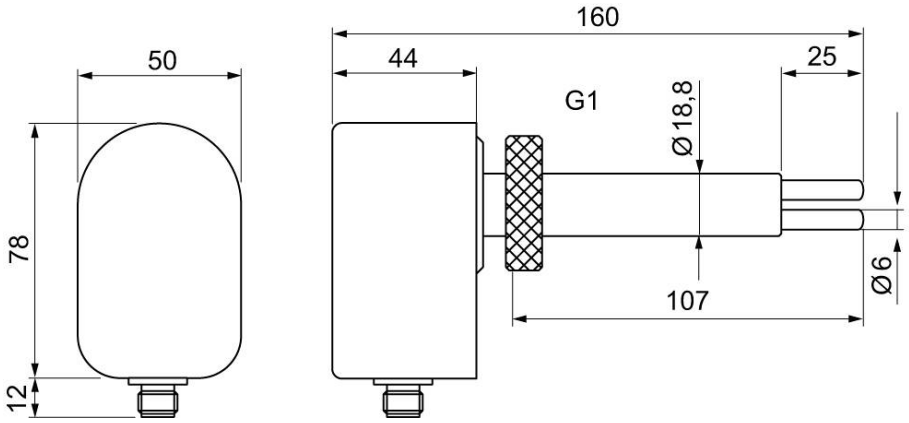 |
| Pin Map | 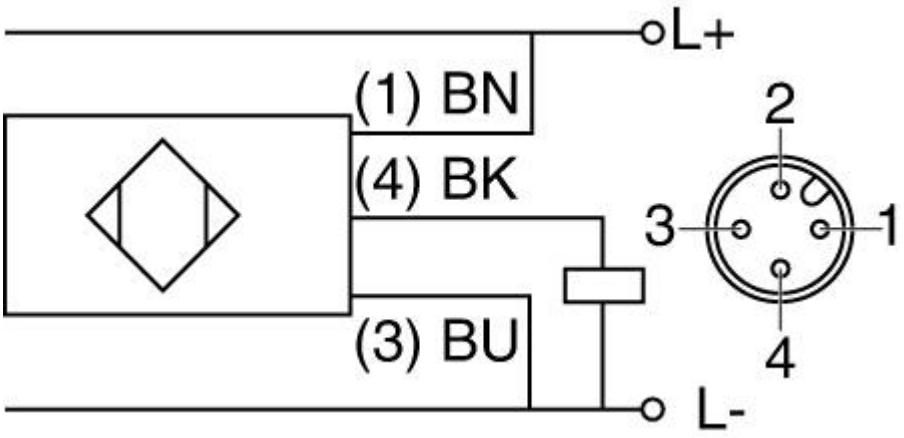 |