# Sensors for explosive areas without amplifier for liquid media | STS 102 KH

- G1/2 screw-in sensor for flow monitoring in liquid media
- ATEX approval for operation in Zone 0 and Zone 20
- ATEX approval for operation in Ex separation wall Zone 0/1
- Medium temperature up to 120 °C
- Corrosion-proof stainless steel housing AISI 316 Ti
- Immersion depth 31 mm
- 2 m fixed cable FEP
- Installation in T-piece or welding sleeve
- Needs ATEX certified amplifier with analogue or switching output
- Observe special conditions for safe use

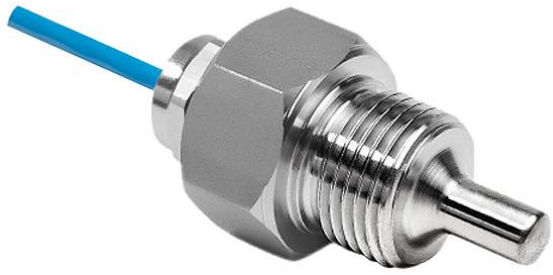

**G1/2 - sensor length 31 mm - Ex-Zone 0/20 - extended temperature range up to 120° - FEP-cable**

| | |
|---|---|
| **TYPE** | STS 102 KH |
| **Product ID** | P11410 |
| **Medium** | water, oil |
| **Detection range water** | 1 cm/s ... 100 cm/s |
| **Detection range Oil** | 3 cm/s ... 200 cm/s |
| **Process connection** | G 1/2 |
| **Sensor length L** | 31 mm |
| **Output** | output with separate amplifier |
| **Ex area uf use** | installation in partition wall Zone 0/1, Zone 0, Zone 20 |
| **ATEX Certificate** | TÜV 98 ATEX 1298 X |
| **Marking gas Ex for partition wall mounting** | Ex II 1/2 G Ex ia IIC T6...T3 Ga/Gb |
| **ATEX marking gas** | Ex II 1 G Ex ia IIC T6...T3 Ga |
| **ATEX Marking dust** | Ex II 1 D Ex ia IIIC T125°C Da |
| **Temperature range in T6** | 10 °C ... 40 °C |
| **Temperature range in T5** | 10 °C ... 55 °C |
| **Temperature range in T4** | 10 °C ... 90 °C |
| **Temperature range in T3** | 10 °C ... 120 °C |


EGE-ELEKTRONIK SPEZIAL-SENSOREN GMBH
TEL. +49 4346 41580 . ege-elektronik.com

| | |
|---|---|
| **Temperature range dust-Ex** | -20 °C ... 85 °C |
| **Maximum values** | Ui = 13.65 V / Ii = 200 mA / Pi = 0.69 W / Ci = 0.45 nF / Li = 1.80 µH |
| **Start-up time typ.** | 8 s(2 s ... 18 s) |
| **Reaction time typ.** | 2 s(1 s ... 13 s) |
| **Compressive strength** | 60 bar |
| **Material sensor touched by medium** | stainless steel AISI 316 Ti |
| **Material housing** | stainless steel AISI 316 Ti, brass |
| **Protection [EN 60529]** | IP 67 |
| **Electrical connection** | 2 m FEP-cable 4x0.25 mm² |
| **Accessories (in scope of delivery)** | 2 x gasket G1/2 AFM 34 |
| **Associated amplifiers** | SZAb 400 EX-GR, SZAb 400 EX-WR115, SZAb 400 EX-WR230, SZAb 400 EX-GA |
| **Note** | probe with longer cable available on request |

Technical Image

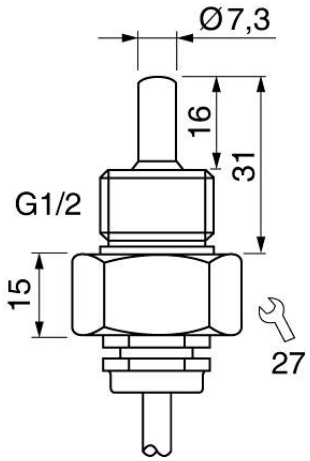


Pin Map

