Sensors without integrated amplifier | ST 5021 KH

- G1/2 screw-in sensor for flow monitoring in gaseous and liquid media
- Medium temperature in liquid media up to 160 °C
- Corrosion-proof stainless steel housing AISI 316 Ti
- Immersion depth 31 mm
- 2 m fixed cable FEP
- Installation in T-piece connector or welding sleeve
- Needs amplifier of series SKM 500 with switching output



G1/2 - sensor length 31 mm - medium temperature up to 160

TYPE	ST 5021 KH
Product ID	P11426
Medium	water, oil
Detection range water	1 cm/s ... 150 cm/s
Detection range air	1 m/s ... 40 m/s
Detection range Oil	3 cm/s ... 300 cm/s
Process connection	G 1/2
Sensor length L	31 mm
Ambient temperature	-20 °C ... 160 °C
Medium temperatur fluids	10 °C ... 160 °C
Medium temperature air/gas	10 °C ... 135 °C
Temperature gradient fluids	250 K/min
Temperature gradient gaseous media	20 K/min
Start-up time typ.	8 s(5 s ... 20 s)
Reaction time typ.	3 s(2 s ... 20 s)
Compressive strength	60 bar
Material sensor touched by medium	stainless steel AISI 316 Ti
Material housing	stainless steel AISI 316 Ti, brass
Protection [EN 60529]	IP 67

EGE-ELEKTRONIK SPEZIAL-SENSOREN GMBH
TEL. +49 4346 41580 . ege-elektronik.com

Electrical connection	2 m FEP-cable 4x0.25 mm²
Accessories (in scope of delivery)	2 x gasket G1/2 AFM 34
Associated amplifiers	SKM 520
Note	probe with longer cable available on request, different materials on request

Technical Image

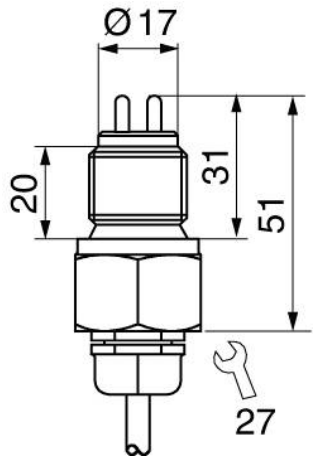

Pin Map

