Sensors for explosive areas without amplifier for liquid media | ST 104 KH

- NPT1/2 screw-in sensor for flow monitoring in liquid media
- ATEX approval for operation in Zone 1 and Zone 21
- Medium temperature up to 120 °C
- Corrosion-proof stainless steel housing AISI 316 Ti
- Immersion depth 40 mm
- 2 m fixed cable FEP
- Installation in T-piece or welding sleeve
- Needs ATEX certified amplifier with analogue or switching output

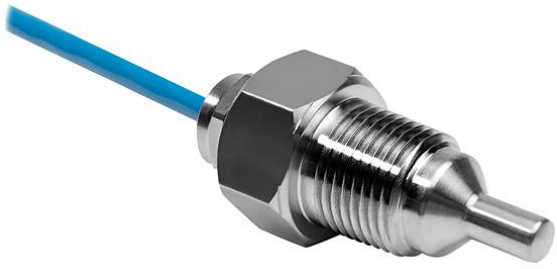

NPT1/2 - sensor length 40 mm - Ex-Zone 1/21 - extended tem to 120° - FEP-cable

TYPE	ST 104 KH
Product ID	P11182
Medium	water, oil
Detection range water	1 cm/s ... 100 cm/s
Detection range Oil	3 cm/s ... 200 cm/s
Process connection	NPT1/2
Sensor length L	40 mm
Output	output with separate amplifier
Ex area uf use	Zone 1, Zone 21
ATEX Certificate	TÜV 97 ATEX 1218
ATEX marking gas	Ex II 2 G Ex ib IIC T6...T3 Gb
ATEX Marking dust	Ex II 2 D Ex ib IIIC T125°C Db
Temperature range in T6	10 °C ... 40 °C
Temperature range in T5	10 °C ... 55 °C
Temperature range in T4	10 °C ... 90 °C
Temperature range in T3	10 °C ... 120 °C
Temperature range dust-Ex	-20 °C ... 85 °C
Maximum values	Ui = 13.65 V / Ii = 200 mA / Pi = 0.69 W / Ci = 0.45 nF / Li = 1.80 µH
Start-up time typ.	8 s(2 s ... 18 s)

EGE-ELEKTRONIK SPEZIAL-SENSOREN GMBH
TEL. +49 4346 41580 . ege-elektronik.com

Reaction time typ.	2 s(1 s ... 13 s)
Compressive strength	60 bar
Material sensor touched by medium	stainless steel AISI 316 Ti
Material housing	stainless steel AISI 316 Ti, brass
Protection [EN 60529]	IP 67
Electrical connection	2 m FEP-cable 4x0.25 mm²
Associated amplifiers	SZAb 400 EX-GR, SZAb 400 EX-WR115, SZAb 400 EX-WR230, SZAb 400 EX-GA
Note	probe with longer cable available on request

Technical Image

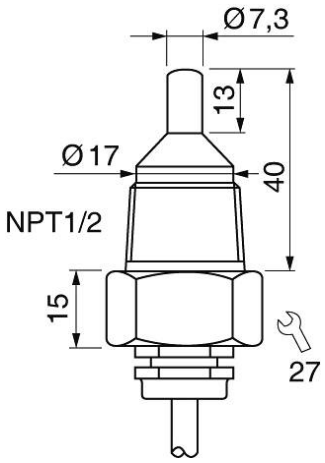

Pin Map

