Sensors without integrated amplifier | STB 450 K

- Triclamp plug-in sensor for flow monitoring in liquid media
- Medium temperature up to 120 °C
- Corrosion-proof stainless steel housing AISI 316 Ti
- Immersion depth 55 mm
- 2 m fixed cable FEP
- Installation in Triclamp adapter
- Needs amplifier with analogue or switching output



TriClamp 50,5 mm - sensor length 55 mm - FEP-cable

TYPE	STB 450 K
Product ID	P11060
Medium	water, oil
Detection range water	1 cm/s ... 150 cm/s
Detection range Oil	3 cm/s ... 300 cm/s
Process connection	Triclamp Ø 50,5 mm
Ambient temperature	-20 °C ... 80 °C
Medium temperature	-20 °C ... 120 °C
Temperature gradient fluids	250 K/min
Start-up time typ.	8 s(2 s ... 15 s)
Reaction time typ.	2 s(1 s ... 13 s)
Compressive strength	100 bar
Material sensor touched by medium	stainless steel AISI 316 L
Material housing	stainless steel AISI 316 L, PVDF
Protection [EN 60529]	IP 68
Electrical connection	2 m FEP-cable 4x0.25 mm²
Accessories (in scope of delivery)	screwdriver
Associated amplifiers	SKM..., SKZ...

EGE-ELEKTRONIK SPEZIAL-SENSOREN GMBH
TEL. +49 4346 41580 . ege-elektronik.com

Note	probe with longer cable available on request

Technical Image

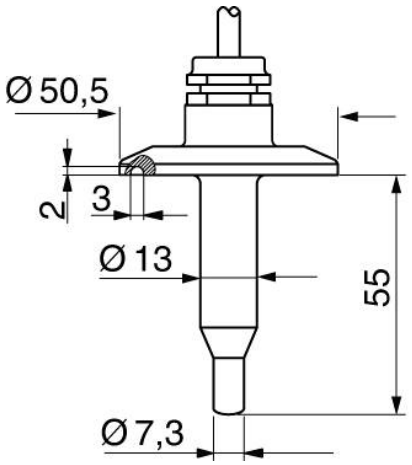

Pin Map

