# Sensors without integrated amplifier | STA 421 S-B3

- G1/2 screw-in sensor for flow monitoring in liquid media
- Corrosion-proof titanium housing with metal-ceramic coating
- Immersion depth 34 mm
- M12 plug system
- Installation in T-piece connector or welding sleeve
- Needs amplifier with analogue or switching output



**G1/2 titanium/metal ceramic coating - sensor length 34 mm - M12 connector**

| | |
|---|---|
| **TYPE** | STA 421 S-B3 |
| **Product ID** | P10622 |
| **Medium** | water, oil |
| **Detection range water** | 1 cm/s ... 150 cm/s |
| **Detection range Oil** | 3 cm/s ... 300 cm/s |
| **Process connection** | G1/2 |
| **Sensor length L** | 34 mm |
| **Ambient temperature** | -20 °C ... 80 °C |
| **Medium temperature** | -20 °C ... 80 °C |
| **Temperature gradient fluids** | 250 K/min |
| **Start-up time typ.** | 8 s(2 s ... 15 s) |
| **Reaction time typ.** | 2 s(1 s ... 13 s) |
| **Compressive strength** | 100 bar |
| **Material sensor touched by medium** | metall-ceramic coating, titan |
| **Material housing** | metal-ceramic coating, titan |
| **Protection [EN 60529]** | IP 67 |
| **Electrical connection** | M12 connector |
| **Accessories (in scope of delivery)** | 2 x gasket G1/2 AFM 34 |



EGE-ELEKTRONIK SPEZIAL-SENSOREN GMBH

TEL. +49 4346 41580 . ege-elektronik.com

| | |
|---|---|
| **Associated amplifiers** | SKM 420, SKM 522, SKZ 400 |
| **Note** | temperature range 10 °C...120 °C on request |

Technical Image

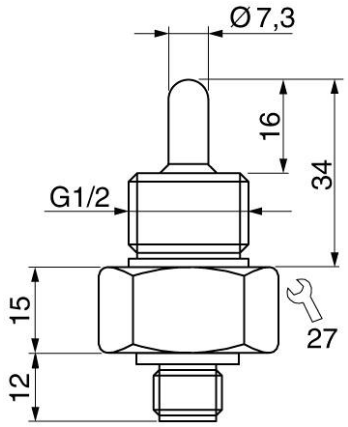


Pin Map

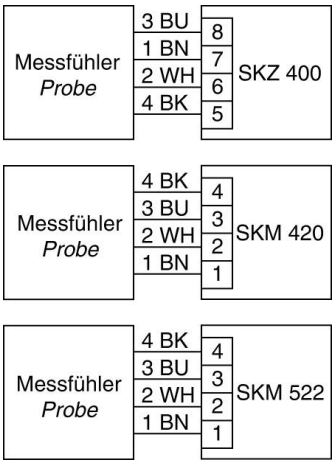




EGE-ELEKTRONIK SPEZIAL-SENSOREN GMBH
TEL. +49 4346 41580 . ege-elektronik.com