# Sensors with integrated amplifier | SN 450/3-A4-WR1

- Screw-in sensor for flow monitoring
- Robust, compact design
- With switching or analogue output
- Flow monitoring in rough and corrosive environments with heightened requirements for the stability and durability of a device



**G 1/2 - sensor length 120 mm - 115 VAC - output relay**

| | |
|---|---|
| **TYPE** | SN 450/3-A4-WR1 |
| **Product ID** | P11082 |
| **Medium** | water, oil |
| **Detection range water** | 1 cm/s ... 150 cm/s |
| **Detection range Oil** | 3 cm/s ... 300 cm/s |
| **Process connection** | G1/2 |
| **Sensor length L** | 120 mm |
| **Output** | switching output |
| **Output function** | relay / change-over |
| **Supply voltage** | 115 V AC +/- 15 % |
| **Current consumption max.** | 60 mA |
| **Switching voltage max.** | 250 V AC / 60 V DC |
| **Switching current max.** | 4 A AC / 4 A DC |
| **Ambient temperature** | -20 °C ... 70 °C |
| **Medium temperature** | -20 °C ... 80 °C |
| **Temperature gradient fluids** | 250 K/min |
| **Start-up time typ.** | 8 s(2 s ... 15 s) |
| **Reaction time typ.** | 2 s(1 s ... 13 s) |
| **Compressive strength** | 100 bar |
| **Material sensor touched by medium** | stainless steel AISI 316 Ti |
| **Material housing** | PBT, PVC |
| **Display flow** | LED-Array |



EGE-ELEKTRONIK SPEZIAL-SENSOREN GMBH

TEL. +49 4346 41580 . ege-elektronik.com

| | |
|---|---|
| **Protection [EN 60529]** | IP 67 |
| **Electrical connection** | 2 m PVC-cable 5x0.5 mm² |
| **Accessories (in scope of delivery)** | 2 x gasket G1/2 AFM 34, screwdriver |
| **Note** | with longer cable available on request |

Technical Image

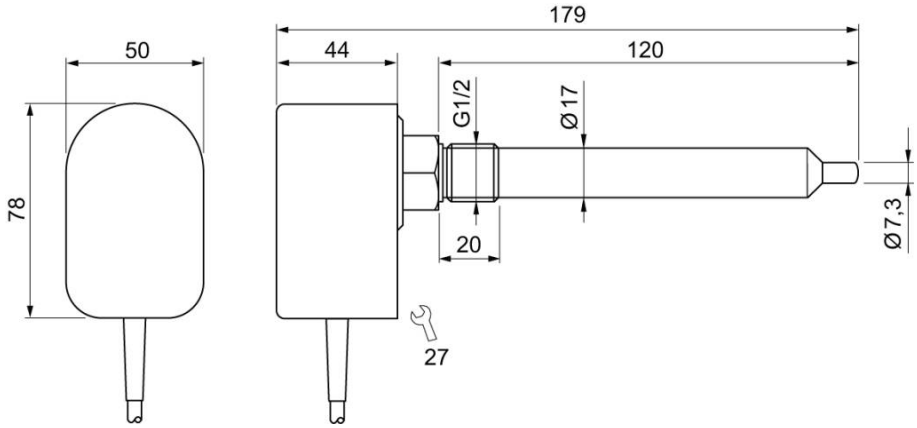


Pin Map

