Sensors with integrated amplifier | SN 450/2-A4-WR1

- Screw-in sensor for flow monitoring
- Robust, compact design
- With switching or analogue output
- Flow monitoring in rough and corrosive environments with heightened requirements for the stability and durability of a device

G 1/2 - sensor length 80 mm - 115 VAC - output relay



TYPE	SN 450/2-A4-WR1
Product ID	P11079
Medium	water, oil
Detection range water	1 cm/s ... 150 cm/s
Detection range Oil	3 cm/s ... 300 cm/s
Process connection	G1/2
Sensor length L	80 mm
Output	switching output
Output function	relay / change-over
Supply voltage	115 V AC +/- 15 %
Current consumption max.	60 mA
Switching voltage max.	250 V AC / 60 V DC
Switching current max.	4 A AC / 4 A DC
Ambient temperature	-20 °C ... 70 °C
Medium temperature	-20 °C ... 80 °C
Temperature gradient fluids	250 K/min
Start-up time typ.	8 s(2 s ... 15 s)
Reaction time typ.	2 s(1 s ... 13 s)
Compressive strength	100 bar
Material sensor touched by medium	stainless steel AISI 316 Ti

EGE-ELEKTRONIK SPEZIAL-SENSOREN GMBH
TEL. +49 4346 41580 . ege-elektronik.com

Material housing	PBT, PVC
Display flow	LED-Array
Protection [EN 60529]	IP 67
Electrical connection	2 m PVC-cable 5x0.5 mm²
Accessories (in scope of delivery)	2 x gasket G1/2 AFM 34, screwdriver
Note	with longer cable available on request

Technical Image

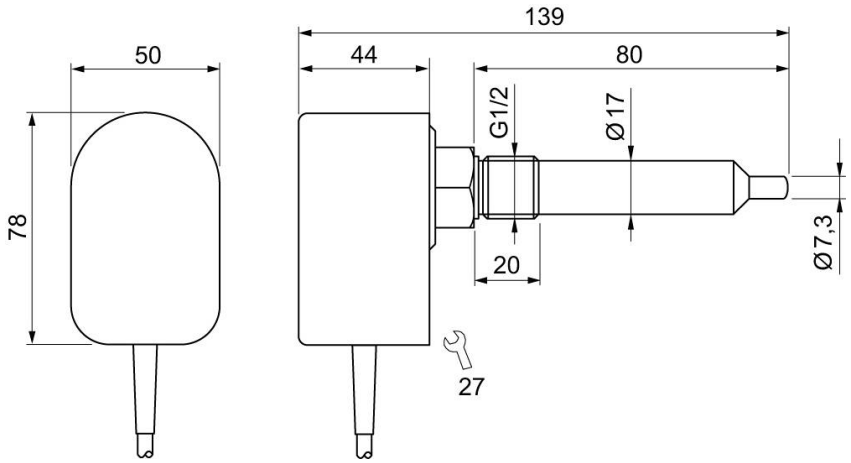

Pin Map

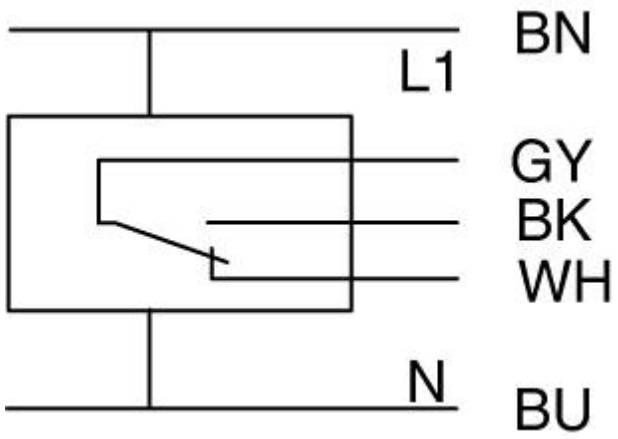

EGE-ELEKTRONIK SPEZIAL-SENSOREN GMBH
TEL. +49 4346 41580 . ege-elektronik.com