Sensors with integrated amplifier | SNT 450/1-A4-WR1

- Screw-in sensor for flow monitoring
- Adjustable temperature monitoring
- Intuitive switching point setting using a potentiometer
- With switching or analogue output
- Flow monitoring in rough and corrosive environments



G1/2 - sensor length 48 mm - 115 VAC - output relay - 2 m PVC cable

TYPE	SNT 450/1-A4-WR1
Product ID	P11220
Medium	water, oil
Detection range water	1 cm/s ... 150 cm/s
Detection range Oil	3 cm/s ... 300 cm/s
Temperature monitoring	-20 °C ... 80 °C
Process connection	G1/2
Sensor length L	48 mm
Output	switching output
Output function	relay
Supply voltage	115 V AC +/- 15 %
Current consumption max.	60 mA
Switching voltage max.	250 V AC / 60 V DC
Switching current max.	2 A AC / 2 A DC
Switching power max.	500 VA / 60 W
Ambient temperature	-20 °C ... 70 °C
Medium temperature	-20 °C ... 80 °C
Temperature gradient fluids	250 K/min
Start-up time typ.	8 s(2 s ... 15 s)
Reaction time typ.	2 s(1 s ... 13 s)
Compressive strength	100 bar

EGE-ELEKTRONIK SPEZIAL-SENSOREN GMBH
TEL. +49 4346 41580 . ege-elektronik.com

Material sensor touched by medium	stainless steel AISI 316 Ti
Material housing	PBT, PVC
Display flow	LED-Array
Display	LED
Protection [EN 60529]	IP 65
Electrical connection	2 m PVC-cable 6x0.5 mm²
Accessories (in scope of delivery)	2 x gasket G1/2 AFM 34, screwdriver
Note	with longer cable available on request

Technical Image

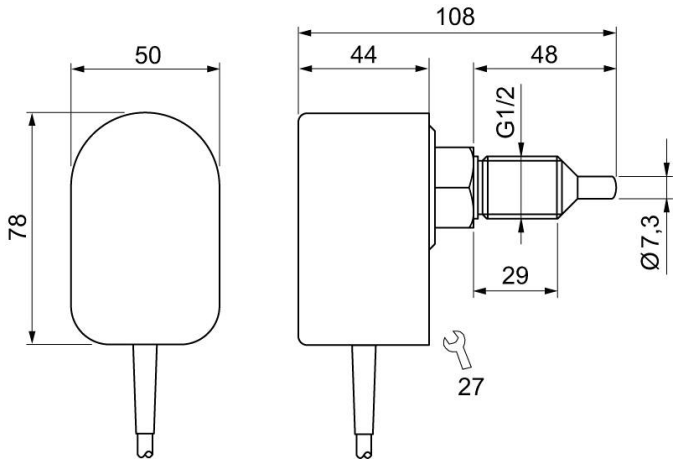

Pin Map

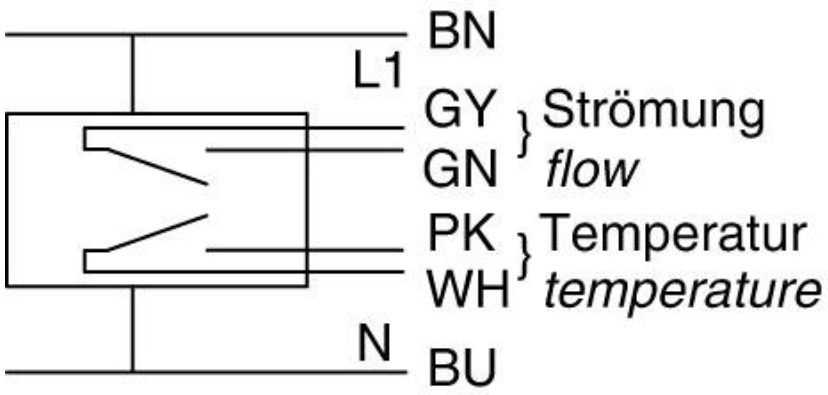

EGE-ELEKTRONIK SPEZIAL-SENSOREN GMBH
TEL. +49 4346 41580 . ege-elektronik.com