Sensors with integrated amplifier | SC 440/5-A4-GSP

- G1/4 screw-in sensor for flow monitoring in liquid media
- Corrosion-proof stainless steel housing AISI 316 Ti
- Immersion depth 25 mm
- LED line for flow status
- M12 plug system
- PNP-NO switching output
- Adjustment with potentiometer



G1/4 - sensor length 25 mm - PNP-NO - M12 connector

TYPE	SC 440/5-A4-GSP
Product ID	P11064
Medium	water, oil
Detection range water	1 cm/s ... 150 cm/s
Detection range Oil	3 cm/s ... 300 cm/s
Process connection	G1/4
Sensor length L	25 mm
Output	switching output
Output function	PNP-NO
Supply voltage	24 V DC +/- 20 %
Current consumption max.	70 mA
Switching current max.	400 mA (20 °C)
Reverse polarity protection	✓
Voltage drop max.	2.5 V
Ambient temperature	-20 °C ... 80 °C
Medium temperature	-20 °C ... 80 °C
Temperature gradient fluids	250 K/min
Start-up time typ.	8 s(2 s ... 15 s)
Reaction time typ.	2 s(1 s ... 13 s)
Compressive strength	100 bar

EGE-ELEKTRONIK SPEZIAL-SENSOREN GMBH
TEL. +49 4346 41580 . ege-elektronik.com

Material sensor touched by medium	stainless steel AISI 316 Ti
Material housing	stainless steel AISI 303, stainless steel AISI 316 Ti, brass, PA
Protection [EN 60529]	IP 67
Electrical connection	M12 connector
Accessories	connecting cable SLG 3-2, SLG 3-5, SLW 3-2, SLW 3-5
Accessories (in scope of delivery)	2 x gasket G1/2 AFM 34, screwdriver
Technical Image	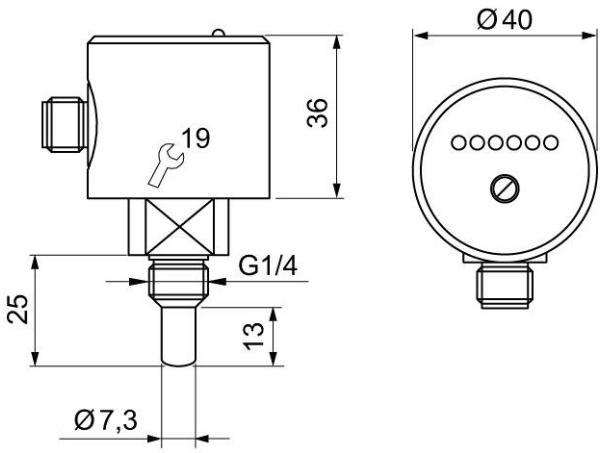
Pin Map	