Sensors with integrated amplifier | SNS 450 GA

- Screw-in sensor for flow monitoring
- Intuitive switching point setting using a potentiometer
- With switching or analogue output
- Flow monitoring in rough and corrosive environments with heightened requirements for the stability and durability of a device
- Plug-in Installation

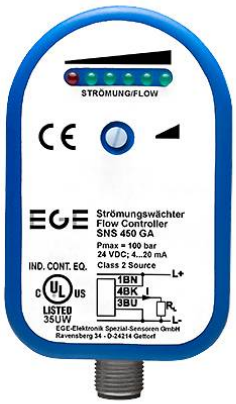

M18x1,5 - sensor length 47 mm - 24 VDC - output analog 4...20 mA - M12 plug system

TYPE	SNS 450 GA
Product ID	P11357
Detection range water	5 cm/s ... 150 cm/s
Process connection	M18x1,5
Sensor length L	47 mm
Output	analog output 4...20 mA, linear
Supply voltage	24 V DC +/- 10 %
Current consumption max.	100 mA
Load RL	200 Ω ... 500 Ω
Reverse polarity protection	✓
Ambient temperature	-20 °C ... 70 °C
Medium temperature	-20 °C ... 80 °C
Start-up time typ.	8 s ... 60 s
Compressive strength	100 bar
Material sensor touched by medium	stainless steel AISI 316 Ti
Material housing	PBT
Display flow	LED-Array
Protection [EN 60529]	IP 67
Electrical connection	M12 connector
Accessories	adapter SDA-SCS-G1/4 (Z01200), adapter SDA-SCS-G1/2-37 (Z01208), adapter SDA-SCS-G1/2 (Z01201)

EGE-ELEKTRONIK SPEZIAL-SENSOREN GMBH
TEL. +49 4346 41580 . ege-elektronik.com

Accessories (in scope of delivery)	2 x gasket G1/2 AFM 34, screwdriver

Technical Image

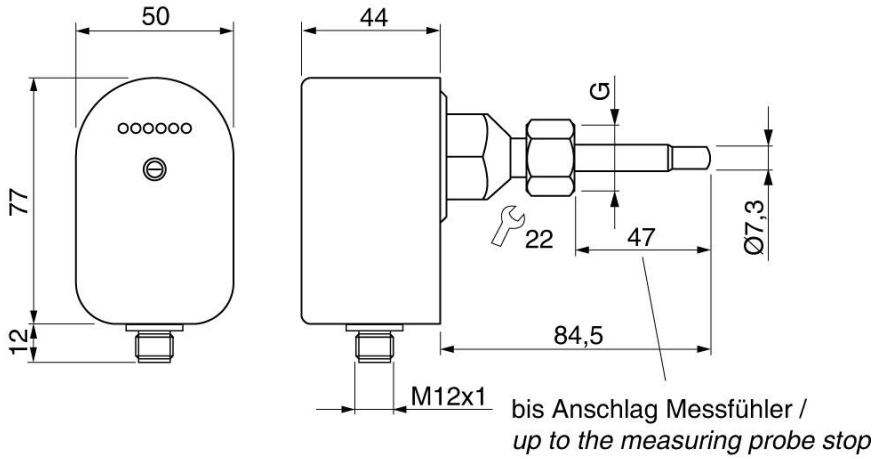

Pin Map

