SENCON
SENSING • TESTING • GAUGING

Bagging Count System for Ends

Quickly identify under- or over-filled sleeves of ends



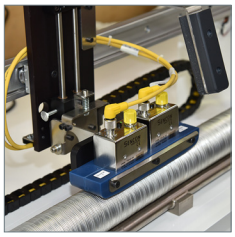

The Bag Count Validator is a much more reliable solution for counting beverage ends for bagging than using hand held ends counters. The system consists of two special non-contact lid/end count sensors which are designed to provide extremely accurate end counts. The sensors sit on a slide on a linear bearing so that the ends stick can easily and quickly pass the counter.

- **Quick, intelligent, accurate and flexible**
- **Replaces unreliable and innacurate hand held ends counters**
- **Simple to set up and easy to use**
- **Works with all beer and beverage ends and 90% of food ends**
- **Increases customer satifaction**



Ordering Information

CODE	DESCRIPTION
A4-403	Bag Count Validator

Optional Extras

CODE	DESCRIPTION
251-40403-21	Replacement re-bagging frame
311-49166-xx	Bag Horn - available sizes: 113 to 401 (please state size required)
311-49166-00	Replacement End counting sensor



END COUNT SENSOR

Accurate counting of beverage or food ends with the ability to compensate for the backup, jiggle, and surging that occurs as ends pass the sensor.

END GAP CONTROL

Helps to maintain the optimum gap at end downstackers through smooth, responsive control of the conveyor speed.



© Copyright 2025 Sencon Group. All rights reserveed. Specifications subject to change without notice. E&OE

TECHNICAL SPECIFICATIONS

Ends Accepted:	200 (50mm) to 400 (100mm)
Maximum Batch Size:	1 stick
Accuracy:	99.998% (when correctly applied and set-up)
Voltage:	100-240 VAC 50/60Hz
Temperature Range:	0°C to 50°C (32°F to 122°F)
Relative Humidity:	25% to 85% operating humidity range
Dimensions:	Length: 2,743mm (108”) Depth: 393mm (15.49”) Height: 493mm (19.40”)
Loading:	Manual loading and unloading
Compliance:	CE marked, complies with relevant EU product directives

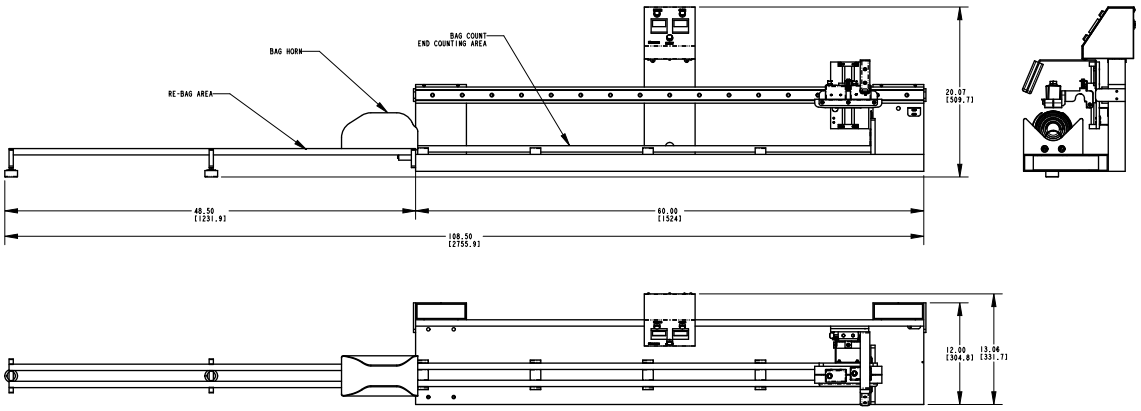



© Copyright 2025 Sencon Group. All rights reserveed. Specifications subject to change without notice. All trademarks acknowledged. E&OE

BAG COUNT VALIDATOR FOR ENDS

The system consists of two specialized non-contact End Count Sensors designed for reliable and highly accurate counts. The count sensors are mounted on a carriage with a linear bearing allowing them to be moved quickly and easily over the stack. Ends are counted in 'stick' form, which makes it easy to unload and reload ends into the bag using the guides provided. Intuitive 'go/no-go' status lights are designed for easy operation.

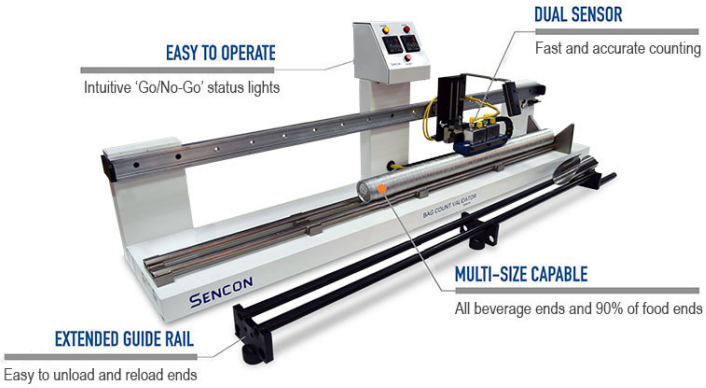

ELIMINATE INNACURATE MANUAL COUNTING: By cutting out costly and inaccurate manual counting and avoiding unreliable hand held counters, Sencon's A4-403 Bag Count Validator provides fast payback for a relatively low investment.

REDUCE SPOILAGE: By quickly identifying over filled and/or under filled bags, you can significantly reduce 'line spoilage' and increase profitability.

REDUCE LABOR COSTS: By eliminating the need for slow and labor intensive manual counting procedures, you can save time and money.

BRAND PROTECTION: By consistently supplying accurately counted bags, you will protect your brand reputation and keep your customers satisfied.

SIMPLE SET-UP: Setting up the Bag Count Validator is simple and quick. Since the unit is portable, it is easily moved from line to line and plugged into a local power source. All an operator needs to do is reset the counters, slide the ends onto the rack using the supplied horns, adjust the sensors to the height of the end, then start counting.

EASY TO USE: The ends are easy to load and unload in stick form using the horns provided. Sensors used on the system are specially designed to achieve highly accurate and reliable counts each time. By simply sliding the sensors from right to left over the lids, a highly accurate count is taken. (Typically 99.998% accurate when correctly applied and set up).

QUICK, INTELLIGENT AND FLEXIBLE: The sensors are unidirectional, so the system only counts forward, which means that even if 'jiggling' occurs, a correct count is still taken. Two counters on the system provide immediate validation. The sensors are adjustable to allow for different end finishes. If your application involves an unusual size, shape or coating, please contact your local Sencon office.

WORLDWIDE SUPPORT YOU CAN TRUST

We are committed to providing the best customer support worldwide with service engineers based in North and South America, Europe and Asia backed up with technical support from experienced industry specialists based at three technical support centers – you can trust Sencon.

Support is available via online chat, email and telephone with support resources for all Sencon products available through our online knowledge base.



Industry specialists for over 45 years

Sencon Inc.
North & Central America
TEL: +1 708 496 3100
info@sencon.com

Sencon
South America
TEL: + 55 19 9 9659 0145
info@sencon.lat

Sencon (UK) Ltd.
Europe, Asia, Africa, Oceania
TEL: +44 1905 827800
info@sencon.co.uk

www.sencon.com

© Copyright 2025 Sencon Group. All rights reserved. All trademarks acknowledged. Specifications subject to change without notice. E&OE