SENCON
SENSING • TESTING • GAUGING

Si Accessories

SI9560 Formed Tube Probe

For non-destructive coatings measurement on formed tubes, monobloc bottle cans and aerosol cans

The Formed Tube/Aerosol Probe is used with is used with the high frequency version of Sencon's SI9600 Coating Thickness Gauge (SI9600HF) to measure the internal and external coating thickness (film weight) on aerosols, monobloc bottle cans or long tubes with very small diameters. Instead of having to cut the tubes open and use the time consuming "weigh-strip-weigh" method, the SI9560 allows you to obtain instant results about coating distribution in a non-destructive and repeatable way with excellent R&R."

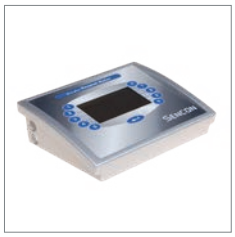



- **Non-destructive testing of formed cans and tubes**
- **Instant results - no strip-weighing**
- **Dead weight balance applies careful but consistent pressure on delicate tube walls**
- **Minimum internal tube diameter: 13.5 mm (0.53")**
- **Maximum internal tube length: 220 mm (8.66")**

Ordering Information

CODE	DESCRIPTION
SI9560	Formed Tube Probe: For aerosol cans, monobloc bottle cans and tubes with small diameters

PLEASE NOTE: The SI9560 only works with the SI9600HF coating thickness gauge, a special variant of the SI9600 Coatings Thickness Gauge that uses a higher frequency test current which is needed for the smaller surface area of the probe tips.

Wear Parts

CODE	DESCRIPTION
212-11910-00	Crocodile clip assembly
311-09520-00	Pack of 5 replacement (3mm) probe tips

SI9600 COATINGS THICKNESS GAUGE

Used in conjunction with various probe accessories like the SI9507+ Formed Can Probe, SI9560 Formed Tube Probe, and SI9651 Hoverprobe™ II, the SI9600 Coatings Thickness Gauge offers rapid and precise measurement of lacquer film thickness (film weight) for internal and external coatings on beverage and food cans or flat sheets.



© Copyright 2025 Sencon Group. All rights reserveed. Specifications subject to change without notice. E&OE

TECHNICAL SPECIFICATIONS

Cans Accepted:	Formed Tube Diameter: 13.5mm min. Formed Tube Length: 220mm max.
Machine Throughput:	Measurement settling time: 3 seconds approximately
Dimensions:	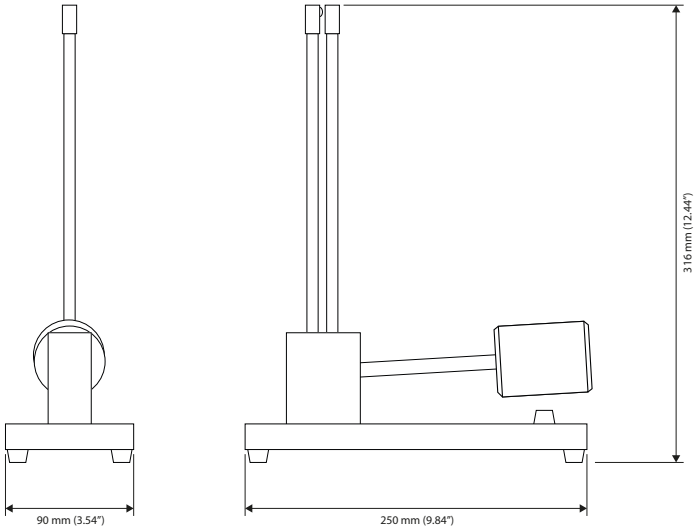
Weight:	2.1kg (4.6lb)
Cable Length:	1.5m (5')
Loading:	Manual loading and unloading
Calibration:	Before use, the gauge-probe combination should be calibrated using a reference sample with known coating thickness (supplied by the coating manufacturer), of the same material and thickness as the tubes to be measured.
Compliance:	CE marked, complies with relevant EU product directives

© Copyright 2025 Sencon Group. All rights reserveed. Specifications subject to change without notice. E&OE

SI9560 FORMED TUBE PROBE

If coating weight measurements produce variable results, operators typically apply heavier coatings settings in order to stay safely within tolerance. This ultimately wasteful expedient can be avoided with the reliable and consistent measurements yielded by Sencon's coatings thickness probes. Operators can then safely run a coater close to the desired specification. Even a small reduction in coatings usage per product will quickly deliver return on investment through cumulative savings on raw material costs.

SPECIAL VARIANT COATINGS GAUGE REQUIRED:

The SI9560 Formed Tube & Aerosol Probe is used with a special variant of the SI9600 Coatings Thickness Gauge. The dedicated SI9600HF Coatings Gauge uses a higher frequency test current which is needed for the smaller surface area of the probe tips.



AN ALTERNATIVE TO MANUAL COATINGS GAUGES

FILM-SCAN™ OPTICAL COATINGS GAUGES

The Benchmark™ Film-Scan™ coatings gauge allows for accurate, consistent and frequent checking of internal and external film thickness and distribution, without any risk of inadvertent operator bias. Results are given as either coatings thickness or film weight.

Film-Scan™ is also available in the fully automtic Master Series™ range.

BENCHMARK SERIES

MASTER SERIES

WORLDWIDE SUPPORT YOU CAN TRUST

We are committed to providing the best customer support worldwide with service engineers based in North and South America, Europe and Asia backed up with technical support from experienced industry specialists based at three technical support centers – you can trust Sencon.

Technical support is easily accessible through our 'Quick Assist' QR codes which offer support via WhatsApp*, email, web chat and telephone. Additionally, our online knowledge base provides support resources for all Sencon products.

***only available in Europe, Asia, Africa and Oceania**



Industry specialists since 1976

Sencon Inc.
North & Central America
TEL: +1 708 496 3100
info@sencon.com

Sencon
South America
TEL: + 55 19 9 9659 0145
info@sencon.lat

Sencon (UK) Ltd.
Europe, Asia, Africa, Oceania
TEL: +44 1905 827800
info@sencon.co.uk

www.sencon.com

© Copyright 2025 Sencon Group. All rights reserved. All trademarks acknowledged. Specifications subject to change without notice. E&OE