SENCON
SENSING • TESTING • GAUGING

SI Gauges

SI9600 Coating Thickness Gauge

Rapid and accurate measurement of lacquer film thickness (film weight) of internal and external coatings on beverage and food cans or flat sheets

If coating weight measurements produce variable results, operators typically apply heavier coatings settings in order to stay safely within tolerance. This ultimately wasteful expedient can be avoided with the reliable and consistent measurements from Sencon's Coatings Thickness Gauge. the coatings process can be brought under tighter control.



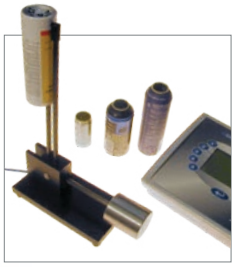

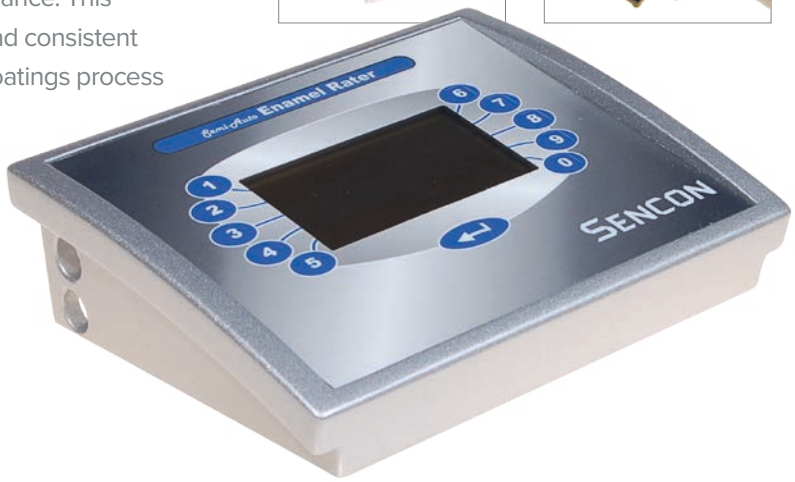

- **Accurate readings**
- **Rapid, semi-automatic operation**
- **Better operating efficiencies**
- **Reduced lacquer consumption**
- **Improved product quality**
- **Use with a Sencon Coatings Probe**

Ordering Information

CODE	DESCRIPTION
SI9600	Coating Thickness Gauge
SI9600HF*	Coating Thickness Gauge for use with SI9560 probe

Please Note: To use this gauge you will also need a suitable coatings probe such as Sencon's SI9651 for testing flat sheets, SI9507 for formed cans, or SI9560 for formed aerosols and tubes. *The SI9600HF is a special variant of the SI9600 Coatings Thickness Gauge that uses a higher frequency test current which is needed for the smaller surface area of the SI9560 formed tube probes tips.

Optional Extras

CODE	ITEM	DESCRIPTION
SI9507+	Formed Can Probe	For use with beverage cans
SI9560	Formed Tube/Aerosol Probe	For measuring internal and external coating thickness on aerosols or long tubes with very small diameters
SI9651	Hoverprobe™ II	For measuring coating thickness on flat sheets
SI9508	Foot Switch	Allows hands free operation for older gauges or where 'auto' mode has been switched off
SX1000	Data-Bridge Software	Adds data logging functionality to gauges with only an RS232 serial interface

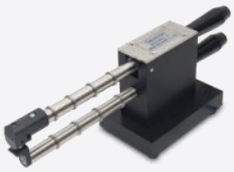

SI9507+ Can Probe



SI9560 Formed Tube/ Aerosol Probe



SI9651 HoverProbe™ II

SIMPLY PLUG 'N' MEASURE

Complete range of plug'n'go accessories available to compliment the SI9600 Coatings Gauge

© Copyright 2025 Sencon Group. All rights reserved. Specifications subject to change without notice. E&OE

TECHNICAL SPECIFICATIONS

Maximum Batch Size:	1 to 100 cans
Measurement Features:	Internal lacquer and external over varnish*
Accuracy:	Linearity better than 1% (subject to stability of probe and sample) tested against national standards with ISO9000 certification
Data Storage:	1000 readings (approximately)
Ingress Protection:	IP65
Dimensions:	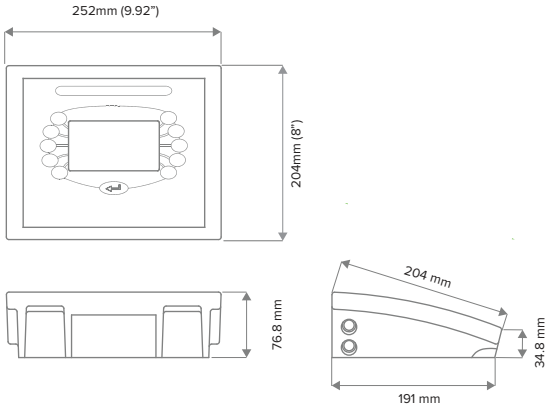
Weight:	1.6kg (3.5lb)
Controller:	Multi-line LCD display with 10 function keys
Measurement Reporting:	Measurements displayed on LCD display Measurements can be output to PC or printer over serial RS232
Input:	5-pin connector for connecting to probes (see accessories for compatible probes)
Output:	RS232 serial connector (for connecting to PC or printer) 150, 300, 600, 1200, 2400, 4800, 9600, 19200 baud
Compliance:	CE marked, complies with relevant EU product directives
Calibration:	**Annual calibration is strongly recommended**

© Copyright 2025 Sencon Group. All rights reserved. Specifications subject to change without notice. E&OE

SI9600 COATINGS THICKNESS GAUGE

ACCURATE READINGS: The gauge is first normalized to a controlled sample of the coating to be measured (obtained from the coating supplier). Comparative readings on products with that coating are then highly accurate with excellent repeatability.

SEMI-AUTOMATIC OPERATION: The operator only has to place the probe on the product at the test location. The SI9600 then automatically checks for stability, takes and displays the reading and sends results via RS232 serial port.

BETTER OPERATING EFFICIENCIES: Rapid yet accurate operation reduces unproductive operator time and allows quicker machine setups.

REDUCED LACQUER CONSUMPTION: Improved accuracy, plus reliable and consistent data leads to better coatings control closer to target film weight specifications.

IMPROVED PRODUCT QUALITY: Accurate readings allow reliable coating equipment setup for consistent product quality.

LOWER SPOILAGE: Rapid operation allows more frequent tests at no additional cost. Problems and trends can be identified earlier, reducing spoilage.

USER FRIENDLY FEATURES:

- Quick-release, recessed connectors to reduce cable damage
- Icon mode or multi-language text mode interface
- Soft-touch keys for accurate data entry
- Flexible configuration, data storage and output options
- Large number of preset and user defined coatings channels
- Corrosion-proof polyurethane case (rated to IP65) ensures maximum reliability and durability in production environments
- Automatic reminders to re-calibrate and change probe tips

SX1000™ DATA BRIDGE

The SX1000 Data Bridge software allows data from the PG5600™ Enamel Rater to be saved to a connected PC either as a single, continuously appended log file, as a daily log file created at the start of each day, or as a batch where a new log file is created for each new batch report.



THE BRIDGE BETWEEN DATA AND YOU

WORLDWIDE SUPPORT YOU CAN TRUST

We are committed to providing the best customer support worldwide with service engineers based in North and South America, Europe and Asia backed up with technical support from experienced industry specialists based at three technical support centers – you can trust Sencon.

Technical support is easily accessible through our 'Quick Assist' QR codes which offer support via WhatsApp*, email, web chat and telephone. Additionally, our online knowledge base provides support resources for all Sencon products.

***only available in Europe, Asia, Africa and Oceania**



Industry specialists since 1976

Sencon Inc.
North & Central America
TEL: +1 708 496 3100
info@sencon.com

Sencon
South America
TEL: + 55 19 9 9659 0145
info@sencon.lat

Sencon (UK) Ltd.
Europe, Asia, Africa, Oceania
TEL: +44 1905 827800
info@sencon.co.uk

www.sencon.com

© Copyright 2025 Sencon Group. All rights reserved. All trademarks acknowledged. Specifications subject to change without notice. E&OE