SENCON
SENSING • TESTING • GAUGING

Si Accessories

Can Stands for Enamel Rating

Sencon's range of enamel rating can stands enables quick and accurate lacquer integrity testing across a wide variety of container types and sizes. Specifically designed for use with Sencon's benchtop semi-auto Enamel Raters.

Useful for checking the integrity of laquer on 2- and 3-piece beverage and food cans, bottle cans, aerosols and tubes.



- **Engineered specifically to allow quick, accurate enamel rating with minimal setup between different can sizes.**
- **Durable design with potted electronics for long-term reliability and easy maintenance.**
- **An integrated electrolyte level probe prevents faulty measurements from under-filled cans.**
- **Specifically engineered for Sencon's benchtop Enamel Raters.**
- **The SI920x series automatically checks system integrity, including the can stand and gauge, before starting a batch.**

Ordering Information

CODE	DESCRIPTION	CAN DIAMETERS	CAN HEIGHTS	MIN NECK SIZE
SI9201*	Beverage Can Stand for straight walled or necked cans	202 (54mm) to 214 (73mm)	Up to 195 mm (7.67")	40mm (1.57")
SI9202*	General Can Stand for a wide range of cans	Up to 100mm (3.93")	Up to 195 mm (7.67")	40mm (1.57")
SI9203*	Superstand™ for outsize products	Up to 190mm (7.5")	Up to 320mm (12.60")	14.5mm (0.57")
SI9101	Beverage Can Stand for straight walled or necked cans	202 (54mm) to 214 (73mm)	Up to 195 mm (7.67")	40mm (1.57")
SI9102	General Can Stand for a wide range of cans	Up to 100mm (3.93")	Up to 195 mm (7.67")	40mm (1.57")
SI9103	Superstand™ for outsize products	Up to 190mm (7.5")	Up to 320mm (12.60")	14.5mm (0.57")

*Only compatible with the SI9200 Enamel Rater. These models feature advanced self-checking with visual confirmation, eliminating manual pre-test checks.

Optional Extras

CODE	ITEM	DESCRIPTION
SI9200	Enamel Rater	Semi-automatic benchtop enamel rater
113-17851-80	211 can centering ring	Quick change can centering ring for 211 cans – Optional for use with all can stands
113-17852-80	209 can centering ring	Quick change can centering ring for 209 cans – Optional for use with all can stands
113-17853-80	Sleek can centering ring	Quick change can centering ring for Sleek cans – Optional for use with all can stands
113-1785-80	202 can centering ring	Quick change can centering ring for 202 cans – Optional for use with all can stands
113-17855-80	73mm can centering ring	Quick change can centering ring for 73mm cans – Optional for use with all can stands

Can centering rings are suitable for use with SI9202, SI9102 and the older SI9008 can stands.

SEMI-AUTOMATIC

SI9200 ENAMEL RATER

Designed for reliability, its semi-automatic operation guarantees accurate results with virtually no maintenance required.



© Copyright 2026 Sencon Group. All rights reserved. Specifications subject to change without notice. E&OE

TECHNICAL SPECIFICATIONS

Can Material:	Aluminium and Steel
Cans Accepted:	**SI9201/SI9101 Beverage can stand:** Maximum can height (external): 195 mm (7.67”) Minimum can height (internal): 63 mm (2.48”) from inside bottom panel / dome to neck Maximum body diameter*: 73mm (2.87”) Minimum body diameter*: 50mm (1.97”) Minimum stand diameter: 40mm (1.57”) Minimum neck diameter: 40mm (1.57”) **SI9202/SI9102 General can stand:** Maximum can height (external): 195 mm (7.67”) Minimum can height (internal): 65 mm (2.56”) from inside bottom panel / dome to neck Maximum body diameter: 100mm (3.93”) when used without can guides. Minimum body diameter: 40mm (1.57”) when used without can guides. Minimum neck diameter: 40mm (1.57”) **SI9203/SI9103 Superstand™:** Maximum Can Height: 320 mm (12.60”) Maximum Body Diameter: 190mm (7.5”) Maximum Base Diameter: 190 mm (7.5”) Minimum Base Diameter: 15 mm (0.59”) Minimum Neck Diameter: 14.5 mm (0.57”)
Controller:	Used with a Sencon Enamel Rater such as the SI9200 or SI9100
System Checks:	SI920x series can stands feature automatic self-checking capability when used with the SI9200 Enamel Rater. This ensures that the system is working correctly prior to a batch start by carrying out a full system integrity check of both the can stand and gauge, eliminating the need for manual pre-test checks.
Cable Connection:	Integral 8-pin cable for connection to a Sencon Enamel Rater
Construction:	Constructed from high-performance engineering-grade plastic with full polyurethane encapsulation. All cable entries are sealed to provide superior corrosion resistance and environmental protection.
Loading:	Manual loading and unloading
Dimensions: Depth does not include cable gland.	**SI9101, SI9102, SI9201, SI9202** 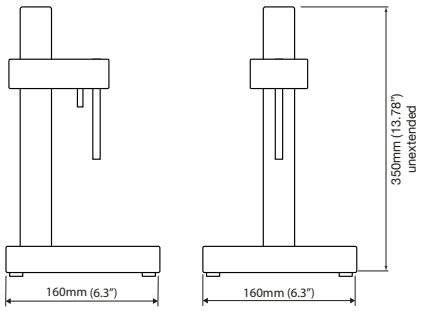 **SI9103, SI9203** 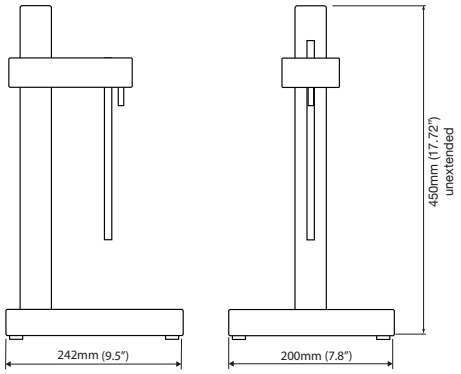
Weight:	1.8kg (3.96lb) / 2kg (4.4lb)
Compliance:	CE marked, complies with relevant EU product directives

© Copyright 2026 Sencon Group. All rights reserved. Specifications subject to change without notice. E&OE

ENAMEL RATING CAN STANDS

BUILT TO LAST: Features highly durable, corrosion-resistant construction with hardened stainless steel can contacts for reliable testing. Fully encapsulated electronics in engineering grade plastic provides superior resistance to harsh operating conditions, ensuring a long service life.

EASY TO USE: Features an integral electrolyte level probe to actively prevent incorrect readings from under-filled cans. Specifically designd to work with Sencon's benchtop semi-automatic Enamel Raters.

COMPACT DESIGN: The compact footprint and rear cable entry minimizes obstruction and ensures easy integration into space-limited lab or production environments. Detachable components make the entire unit exceptionally easy to maintain and clean.

ADVANCED SELF-CHECKS : When paired with the SI9200 Enamel Rater, the SI920x series can stands perform automated self-diagnostics of both gauge and can stand prior to every batch start, completely eliminating manual pre-test checks.

BEVERAGE CAN STANDS

Accepts a wide range of straight walled or necked beverage cans, with easy-change supports for different can diameters from 202 (54mm) to 214 (73mm).

Can contact fail-safe circuit check - automatic (SI9201), test button (SI9101).



GENERAL CAN STANDS

Accepts a wide range of cans up to 100mm (3.93") diameter.

Can contact fail-safe circuit check - automatic (SI9202), test button (SI9102).



SUPERSTAND™

Built for flexibility to check containers with narrow necks, large base diameters, low profiles and tall heights. Ideal for welded or monobloc aerosol cans, bottle cans and tubes.

- Narrow gap between the test and level probes allows small necked cans to be tested
- Probe adjustment thumb wheel locks for maximize repeatability
- Can contact fail-safe circuit check - automatic (SI9203), test button (SI9103).

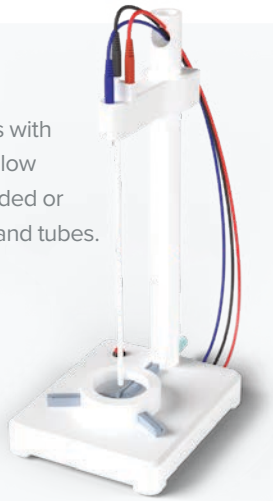

Centering rings are used with the Superstand™ and allow the General Can Stand to be used with beverage cans.



WORLDWIDE SUPPORT YOU CAN TRUST

We are committed to providing the best customer support worldwide with service engineers based in North and South America, Europe and Asia backed up with technical support from experienced industry specialists based at three technical support centers – you can trust Sencon.

Technical support is easily accessible through our 'Quick Assist' QR codes which offer support via WhatsApp*, email, web chat and telephone. Additionally, our online knowledge base provides support resources for all Sencon products.

***only available in Europe, Asia, Africa and Oceania**



Industry specialists since 1976

Sencon Inc.
North & Central America
TEL: +1 708 496 3100
info@sencon.com

Sencon
South America
TEL: + 55 19 9 9659 0145
info@sencon.lat

Sencon (UK) Ltd.
Europe, Asia, Africa, Oceania
TEL: +44 1905 827800
info@sencon.co.uk

www.sencon.com

© Copyright 2026 Sencon Group. All rights reserved. All trademarks acknowledged. Specifications subject to change without notice. E&OE