SENCON
SENSING • TESTING • GAUGING

Benchmark™

Benchtop Front End Gauge



Semi-automatic measurement of key dimensions on trimmed (un-necked) beverage cans

The Benchmark™ Front End Gauge (Trimmed Can Gauge) measures can height, mid and top side wall thickness, and dome depth on un-necked, trimmed beverage cans. A special order option also adds Cup measurement.

- **Automatic measurement of critical features**
- **Multiple can sizes with tool-free insert**
- **Excellent R&R – no operator influence on results**
- **Well proven technology**
- **Constant self monitoring/self calibrating**
- **Single, and multi-probe variants availble**
- **Also available in a fully automatic modular Master Series™ version**

Ordering Information

CODE	DESCRIPTION	CAN SIZE	HEIGHT
SI6802	Benchmark™ Front End Gauge: Single probe	202 (53mm) to 214/300 (73mm)	87mm (3.4”) to 196mm (7.7”)
SI6805*	Benchmark™ Front End Gauge: Dual-Probe	202 (53mm) to 214/300 (73mm)	87mm (3.4”) to 196mm (7.7”)
SI6801	Benchmark™ Front End Gauge: DWI Aerosol	200 (45mm) to 214/300 (73mm)	96mm (3.7”) to 215mm (8.4”)
SI6810**	Benchmark™ Front End Gauge: for Cans and Cups	200 (45mm) to 214/300 (73mm) - 115mm for Cups	up to 240mm (9.4”)

*Fixed probe heights are specified at time of ordering.
**Special order variant to measure both trimmed cans and ‘Cups’ on the same gauge. Longer leadtimes apply.

SINGLE OR DUAL PROBE MODELS

SINGLE

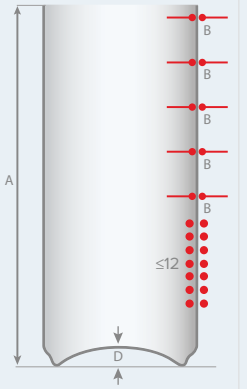

A. Can Height
B. Side Wall Thickness
(up to 12 programmable heights)
D. Dome Depth

DUAL

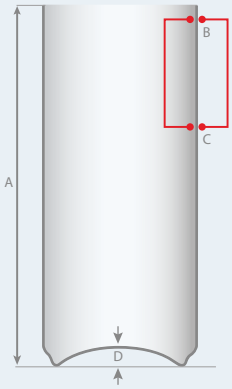

A. Can Height
B. Top Wall Thickness
C. Mid Wall Thickness
D. Dome Depth

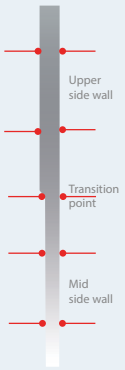

Data can be used to find the transition point

SI6802 SINGLE PROBE

Measures side wall thickness at up to 12 vertical locations (to 40mm from the bottom of the can) and numerous radial positions. The data yielded can be used for side wall modelling to find the transition point. However, as the side wall measurements are made subsequent to the can height and dome depth readings, the cycle time is slightly extended.

SI6805 DUAL PROBE

Measures the top and mid wall at two fixed heights concurrently, reducing the overall cycle time. Fixed probe heights are specified by the customer at the time of ordering.

© Copyright 2026 Sencon Group. All rights reserved. Specifications subject to change without notice. E&OE

TECHNICAL SPECIFICATIONS

Can Material:	Aluminium and Steel
Cans Accepted:	Un-necked cans only (cups on special order versions)
Maximum Batch Size:	255 cans
Measurement Features:	• Height measurements taken at user-specified number of positions (radial slices) around can circumference • Wall thickness measurements taken at up to 12 vertical positions (vertical slices) and at user-specified number of positions around can circumference (radial slices) at each vertical position – Ability to set different pass / warning / fail thresholds for mid-wall and top-wall measurements • Single dome height measurement at centre of dome • Measurements can be displayed in metric or imperial units • For can height and for wall thickness at each vertical position, can display: – Individual readings at all positions around circumference – Average of readings around circumference – Max. and min. of readings around circumference – Range (max. less min.) of readings around circumference
Accuracy:	Can Height: ±0.01mm (±0.39 thou) Side Wall Thickness: ±0.001mm (±0.039 thou) Dome Depth: ±0.01mm (±0.39 thou)
Voltage:	100 - 240 V a.c., single phase
Air Supply:	6 to 7 bar
Temperature Range:	15°C to 40°C (59°F to 104°F)
Relative Humidity:	0% to 80% non-condensing
Ingress Protection:	IP20
Dimensions:	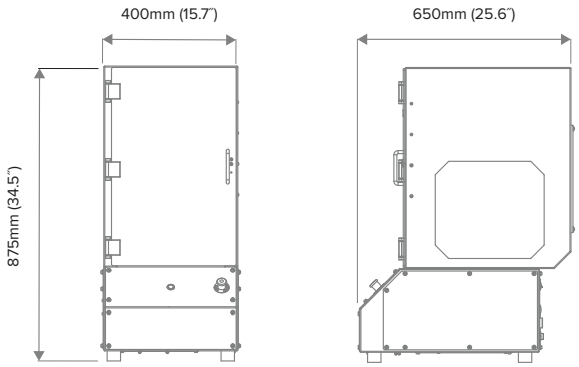
Weight:	80kg (176lb) gauge only
Controller:	Process Master™ gauge software running on attached PC
Measurement Reporting:	Batch results displayed on PC screen and optionally sent as report to network storage or network printer (Report format specified at time of order) No. of batch results stored: user-definable in software (default = 100)
Loading:	Manual loading and unloading
Compliance:	CE marked: complies with relevant EU product directives
Calibration:	Gauge re-baselines against a UKAS certificated setting piece for all can sizes if measurement drift is detected. Two setting pieces are provided so that one can be used while the other is sent for calibration. Annual calibration of setting pieces is strongly recommended.

PLEASE NOTE: Cans for testing must be clean and dry.

© Copyright 2026 Sencon Group. All rights reserved. Specifications subject to change without notice. E&OE

BENCHMARK™ FRONT END GAUGE

The Benchmark™ Front End Gauge (Trimmed Can Gauge) measures can height, mid and top side wall thickness, and dome depth on un-necked, trimmed beverage cans. The gauge uses well-proven technology that eliminates all operator influence on the results.

BETTER PROCESS CONTROL: Reliable and consistent measurements with excellent R&R (repeatability and reproducibility) allow manufacturers to gain better control of their process.

MULTIPLE CAN SIZES: Cans with different can diameters can be measured with quick change, tool-free change parts. Different can heights need no change parts. So several standard can sizes and shapes can easily and quickly be tested with a single gauge. The SI6810 is a special variant designed to measure both trimmed Cans and Cups from the Cupping Press on the same gauge.

INCREASED ACCURACY: The gauge constantly monitors its own performance and recalibrates if drift is detected. Every measurement is qualified using a single UKAS certificated setting piece (for all can sizes), saving time and money as only a single setting master requires annual certification.

LOW RUNNING COSTS: Each gauge is designed for low maintenance, eliminating wear parts where possible to reduce running costs and maximize durability.

MEET THE BIG BROTHERS ...

WORLDWIDE SUPPORT YOU CAN TRUST

We are committed to providing the best customer support worldwide with service engineers based in North and South America, Europe and Asia backed up with technical support from experienced industry specialists based at three technical support centers – you can trust Sencon.

Technical support is easily accessible through our ‘Quick Assist’ QR codes which offer support via WhatsApp*, email, web chat and telephone. Additionally, our online knowledge base provides support resources for all Sencon products.

***only available in Europe, Asia, Africa and Oceania**



Industry specialists since 1976

Sencon Inc.
North & Central America
TEL: +1 708 496 3100
info@sencon.com

Sencon
South America
TEL: + 55 19 9 9659 0145
info@sencon.lat

Sencon (UK) Ltd.
Europe, Asia, Africa, Oceania
TEL: +44 1905 827800
info@sencon.co.uk

www.sencon.com

© Copyright 2026 Sencon Group. All rights reserved. All trademarks acknowledged. Specifications subject to change without notice. E&OE