SENCON
SENSING • TESTING • GAUGING

ES8000™

Shell & Progression Gauging Platform



Provides non-contact measurement of food and beverage Shells and Progressions

The unique ES8000 hardware platform can be configured as a Progression Gauge, Shell Gauge, or both. The gauge redefines standards for flexibility and measurement repeatability across food and beverage.

- **Can be configured for shell and progression measurement in one unit**
- **Easy upgrade paths from single gauge to dual function**
- **Saves cost of purchasing two separate gauges**
- **Reduced servicing costs (only one gauge to maintain; non-contact sensors require little maintenance)**
- **Simplifies operator training (only one gauge to learn)**
- **Minimizes gauging footprint (saves laboratory floor space)**
- **Accepts all round food and beverage shells and ends up to 110mm (95mm as standard)**

Ordering Information

CODE	DESCRIPTION	END SIZES SUPPORTED
ES8001	Shell & Progression Gauge	46mm to 95mm (1.81” to 3.74”) nominally 113 to 307 with automatic adjustment
ES8002	Shell Gauge	46mm to 95mm (1.81” to 3.74”) nominally 113 to 307 with automatic adjustment
ES8003	Progression Gauge	46mm to 95mm (1.81” to 3.74”) nominally 113 to 307 with automatic adjustment
ES8000XL*	Shell & Progression Gauge - Large	46mm to 110mm (1.81” to 4.33”) nominally 113 to 404 with automatic adjustment

UPGRADES: Existing ES8000 systems can easily be upgraded to add shell or progression functionality when required.
*Available as an extended-range version, by special order in Shell, Progression or Shell & Progression gauge configurations. This version features two end drawers instead of the standard three.

VIRTUAL SECTIONING™

Sencon’s Virtual Sectioning™ feature shows complete and accurate profiles of all progression stages, including material thickness. Users can carry out microscopic analysis by zooming in on the fine detail, removing the need for the time consuming and destructive task of physically sectioning ends. Supports DXF export.

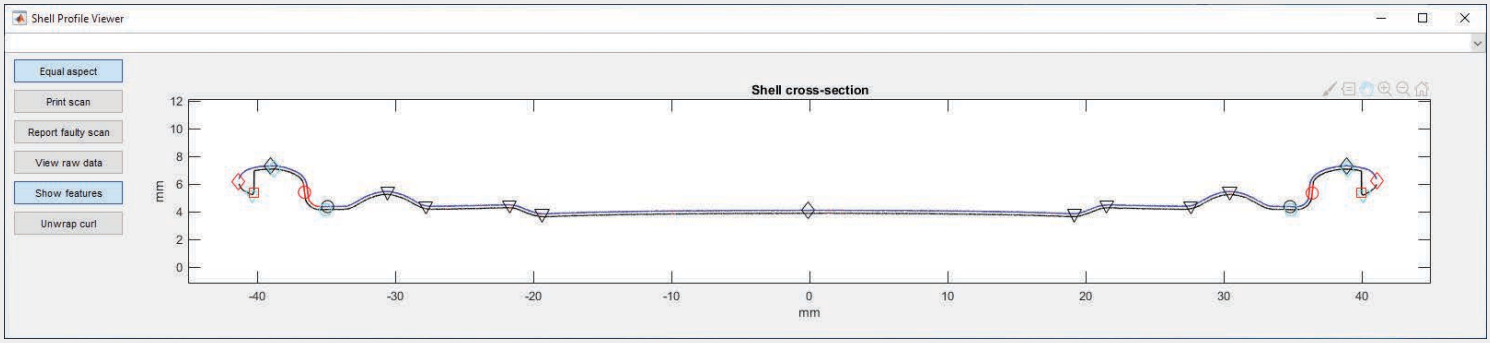

© Copyright 2025 Sencon Group. All rights reserved. Specifications subject to change without notice. E&OE

TECHNICAL SPECIFICATIONS

End Material:	Aluminium and Steel	
Ends Accepted:	All circular easy open Beverage and Food ends (for other shapes please contact you regional Sencon office). 46mm to 95mm (1.81” to 3.74”) nominally 113 to 307 (An extended-range version is also available by special order, accommodating diameters up to 110mm). Plain, colored and black coated ends and tabs are supported	
Measurement Features:	Shell Measurements All standard beverage and food shell features can be measured including: Countersink depth, Outside diameter, Overall height, Curl opening, Panel height, Inside curl diameter, Lip/curl height, Material thickness, Off-draw, Curl Concentricity, Uncurled Diameter. Additional measurements can be added on request. Beverage Shell 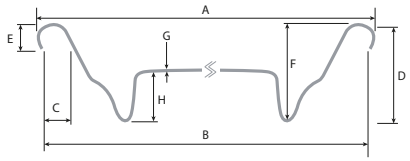 Food Shell 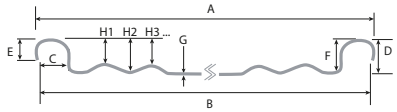 	Progression Measurements All standard beverage and food progression features* can be measured including: Bubble, Button, Rivet (including off-center), bead, coining, panel, anti-missile and off-draw. Additional measurements can be added on request. 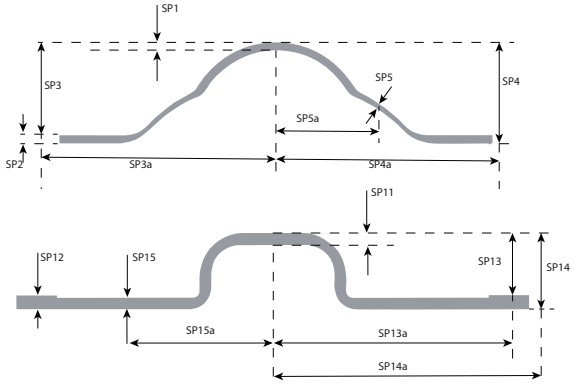 *excludes score measurements.
Throughput:	Shell throughput times depend on the diameter of the shell, the number of slices measured, and whether grain orientation is selected. Measuring 2 slices on a 60mm shell with no grain orientation takes 66 seconds.	Progression throughput times depend on the type and number of features selected – approximately 7.5 minutes per lane (4 ends per lane).
Automatic Orientation:	Automatic grain orientation is optional and can be disabled.	Orientation is detected automatically using features on the end or from a black marker line drawn by the operator.
Dimensions:	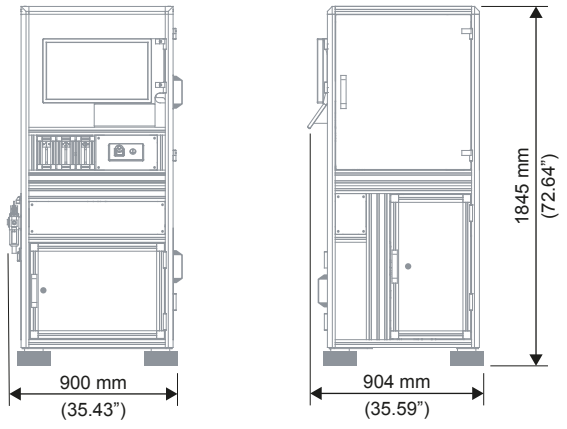 FRONT SIDE	
Weight:	290 kg	
Controller:	24” Touch-screen monitor running Sencon’s Process Master™ gauge software on an internal PC	
Measurement Reporting:	The last 50 batch results and scan profiles are available on the PC screen and optionally can be sent as report to network storage or network printer. Printer (pdf) and network (csv) reports in Sencon standard format. Custom report formats are available on request. The gauge offers the ability to export DXF files for comprehensive and detailed analysis of virtual sections.	
Loading:	Automatic from three drawers each with fully adjustable end locators (2 drawers on the ES8000XL)	
Compliance:	CE marking: complies with relevant EU product directives UKCA marked: complies with relevant UK product regulations	
Calibration:	Integrated traceable calibration piece as thickness reference Annual calibration of gauge is strongly recommended	

© Copyright 2025 Sencon Group. All rights reserved. Specifications subject to change without notice. E&OE

ES8000™ – A COMMON GAUGING PLATFORM

FLEXIBILITY FOR FOOD AND BEVARGE ENDS:


Shells


Progression


Shell & Progression

The unique ES8000 hardware platform can be configured as a Progression Gauge, a Shell Gauge, or both, redefining standards for flexibility and measurement repeatability. The common platform makes it easy to add a second gauging function at any time inside the same cabinet, saving floor space and costing less than two separate gauges.

- Both sides of the end/shell are scanned simultaneously with dual laser calipers
- All circular beverage ends and shells for both food and beverage are accepted
- Centered or off-centre rivets measured
- Plain, colored and black coated ends measured
- Three* infeed drawers, each with adjustable end locators

IMPROVED PRODUCT QUALITY: Non-contact sensors simultaneously measure features from both top and bottom surfaces of the end. The compiled test results present a clear, accurate and comprehensive visualization of the features measured. If specification limits are reached, the gauge gives immediate warning via the operator screen and the warning beacon. Results are classified, displayed and automatically exported to third party SPC systems.

MULTIPLE SIZES, FLEXIBLE LOADING: Batches of different sizes can be set up via 3 loading drawers (2 for ES8000XL), which can be loaded while the gauge is running. Each drawer has separate input and output locations for easy reference.

ADDITIONAL END DESIGNS: Additional end designs or features can be added at a later date, made possible with Sencon's new, flexible Gauge Builder™ software.

PROTECTS EXPENSIVE TOOLING: Reuslts will indicate when tooling really needs changing, rather than making a precautionary change sooner than actually required.

FOOD ENDS: The ES8000 can measure curled and uncurled round food shells (both EOE and NEO), and round EOE food progressions. For features such as deboss heights, the number of measurement locations is configurable. It can measure all the corrugation features on NEO food shells and generate virtual sections.

OFF-CENTER RIVETS: The ES8000 works with any off-centre rivet style for both beverage and food samples, and is capable of measuring Rivet Diameter, Rivet Residual, Tab Elevation, and Tab Debossing.

DXF EXPORT: The gauge offers the ability to export DXF files for comprehensive and detailed analysis of virtual sections.

WORLDWIDE SUPPORT YOU CAN TRUST

We are committed to providing the best customer support worldwide with service engineers based in North and South America, Europe and Asia backed up with technical support from experienced industry specialists based at three technical support centers – you can trust Sencon.

Technical support is easily accessible through our 'Quick Assist' QR codes which offer support via WhatsApp*, email, web chat and telephone. Additionally, our online knowledge base provides support resources for all Sencon products.

***only available in Europe, Asia, Africa and Oceania**



QUICK ASSIST

Industry specialists since 1976

Sencon Inc.
North & Central America
TEL: +1 708 496 3100
info@sencon.com

Sencon
South America
TEL: + 55 19 9 9659 0145
info@sencon.lat

Sencon (UK) Ltd.
Europe, Asia, Africa, Oceania
TEL: +44 1905 827800
info@sencon.co.uk

www.sencon.com

© Copyright 2025 Sencon Group. All rights reserved. All trademarks acknowledged. Specifications subject to change without notice. E&OE