SENCON
SENSING • TESTING • GAUGING

Can-on-Mandrel Sensors

Removes the primary cause of false trips, missed blow-offs and bright cans on coating and decorating machines



False tripping and other control errors are eliminated by Sencon's Can-on-Mandrel sensors. Integral circuitry guarantees a minimum output pulse length regardless of machine speed or static discharges. This fixed pulse duration therefore removes the prime source of false tripping and ensures that the control system operates correctly.

- **Reduces stoppages**
- **Fixed pulse duration eliminates control problems**
- **Provides a 12ms pulse even if electrical discharge interupts the Can-on-Mandrel output signal**
- **Rugged construction**

Ordering Information

CODE	DESCRIPTION	CAN MATERIAL	CASE STYLE	CABLE TYPE	PUNCH
11-247-03-P5	Pulse Stretched Can-on-Mandrel Sensor	Aluminum	H	Quick disconnect	Steel mandrel
11-267-03-P5	Pulse Stretched Can-on-Mandrel Sensor	Steel	H	Quick disconnect	Carbide mandrel

Can on mandrel sensors are not supplied with a cable.

Optional Extras

CODE	ITEM	DESCRIPTION
QDC-6F-4S	Cable	2 m (6ft) Cable with straight connector
QDC-16F-4S	Cable	5 m (16ft) Cable with straight connector
QDC-32F-4S	Cable	10 m (32ft) Cable with straight connector
QDC-6F-4R	Cable	2m (6ft) Cable with right angled connector
QDC-16F-4R	Cable	5 m (16ft) Cable with right angled connector
QDC-32F-4R	Cable	10 m (32ft) Cable with right angled connector

Other cable lengths and connector styles are available, please contact your local Sencon sales office for details.

SENSORS THAT QUIETLY PROTECT YOUR LINE



Proximity sensors inside the decorator detect cans on mandrels during the printing process. Static discharge between the can and the sensor can interfere with detection, leading to production faults and costly interruptions. Sencon's Can-on-Mandrel sensors incorporate specialised design features to eliminate these issues, ensuring reliable detection in demanding environments. They operate so dependably that they go unnoticed—quietly protecting your line.

© Copyright 2026 Sencon Group. All rights reserved. Specifications subject to change without notice. E&OE

TECHNICAL SPECIFICATIONS

Cable Type:	Quick disconnect
Connection:	sink(PNP) / source(NPN)
Minimum Pulse Duration:	12ms
Setting Distance:	0.150" ± 0.025" (3.8 mm ± 0.6 mm)
Dimensions:	Case style H

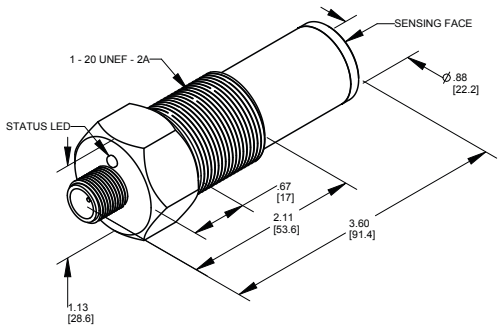

© Copyright 2026 Sencon Group. All rights reserved. Specifications subject to change without notice. All trademarks acknowledged. E&OE

CAN-ON-MANDREL SENSORS

FIXED PULSE DURATION ELIMINATES CONTROL PROBLEMS:

At 2000 cpm the typical pulse duration for “can-on-mandrel” and “damaged can” signals is around 3 milliseconds. However, if an electrostatic discharge from the can to the sensor occurs — sometimes a common event — this could be reduced to a few microseconds. Such short signals may be missed by the control system, causing false trips, missed blow-offs and bright cans.

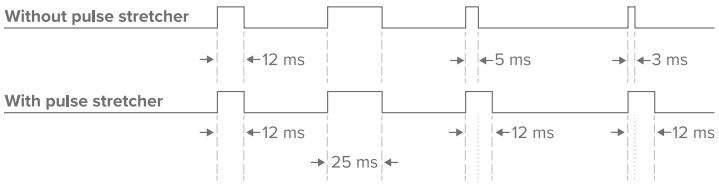

Electrical discharges between a can and a can-on-mandrel sensor may interrupt the sensor’s output signal, causing false tripping (an interrupted signal when a can is actually present) and other control errors which cause stoppages on coating and decorating machines. As the system requires a minimum signal duration, the machine control may fail to recognize the output if there is electrostatic interference even when the signal is not completely suppressed. Sencon’s Can-on-Mandrel sensors prevent this by always sending a 12ms output pulse.

BETTER SYSTEM CONTROL: These models have all the proven benefits of Sencon’s high performance sensors, plus the fast response times and unrivaled positive discrimination between mandrel and can materials which is needed to ensure correct operation of the control system.

RUGGED CONSTRUCTION: All Sencon metal discriminating sensors are fully encapsulated in non-hygroscopic materials, and are highly resistant to shock, vibration, coolant oils and humidity.

COMPLETE AND COMPATIBLE: All 200 Series metal discriminating sensors are equipped with both source (PNP) and sink (NPN) outputs, and are supplied complete with mounting nuts.

YOU CAN COUNT ON US

With Sencon Count Sensors, you’ll always get the right answer. Whether counting cans or ends, our sensors deliver consistently accurate results, intelligently compensating for backup, jiggle, and line surging to ensure reliable performance in real production conditions.



WORLDWIDE SUPPORT YOU CAN TRUST

We are committed to providing the best customer support worldwide with service engineers based in North and South America, Europe and Asia backed up with technical support from experienced industry specialists based at three technical support centers – you can trust Sencon.

Technical support is easily accessible through our ‘Quick Assist’ QR codes which offer support via WhatsApp*, email, web chat and telephone. Additionally, our online knowledge base provides support resources for all Sencon products.

***only available in Europe, Asia, Africa and Oceania**



Industry specialists since 1976

Sencon Inc.
North & Central America
TEL: +1 708 496 3100
info@sencon.com

Sencon
South America
TEL: + 55 19 9 9659 0145
info@sencon.lat

Sencon (UK) Ltd.
Europe, Asia, Africa, Oceania
TEL: +44 1905 827800
info@sencon.co.uk

www.sencon.com

© Copyright 2026 Sencon Group. All rights reserved. All trademarks acknowledged. Specifications subject to change without notice. E&OE