SENCON
SENSING • TESTING • GAUGING

End Gap Control System

Prevents ends flipping in takeaway hoppers and downstackers

If ends flip in the hopper after a takeaway belt or at downstackers, this can lead to jams at the seamer. Sencon's End Gap Control System prevents this by evenly matching belt delivery and take-away speeds, tightly regulating the stack height. Also used with roller gap control on downstackers at machine infeeds, the End Gap Sensor maintains a constant gap based on machine speed. Unlike standard proximity switches, the sensor's analog signal achieves this smoothly and continually, reducing clutch wear on motor drives.

- **Improved line performance**
- **Reduced maintenance costs**
- **Quick and simple push button set-up**



T400WR-UV IAC452A

Ordering Information

CODE	DESCRIPTION
11-322-04-EX	End Gap Sensor
ENDSTK-ASSY	Complete End Gap Control System: Includes Sensor, 2m cable, IAC452A module
ENDSTK-ASSY-5M	Complete End Gap Control System: Includes Sensor, 5m cable, IAC452A module

PLEASE NOTE: End Gap sensors are not supplied with a cable or mounting bracket.

Optional Extras

CODE	ITEM	DESCRIPTION
IAC452A	Reciever/Output Module	Module for DIN rail mounting
T400 WR-UV	Receiver/Output Module	Enclosed Module
QDC-6F-4S	Cable	2 m (6ft) Cable with straight connector
QDC-16F-4S	Cable	5 m (16ft) Cable with straight connector
QDC-32F-4S	Cable	10 m (32ft) Cable with straight connector
QDC-6F-4R	Cable	2m (6ft) Cable with right angled connector

A4-403 BAG COUNT VALIDATOR

THE EASY WAY TO IDENTIFY UNDER- OR OVER-FILLED SLEEVES OF ENDS

The Bag Count Validator is a much more reliable way to count beverage ends for bagging than using hand held counters. The system consists of two specialized, non-contact end count sensors that provide extremely accurate product counts. The sensors sit on a slide on a linear bearing so they can easily and quickly pass over the stick of ends. Results are shown on a convenient digital display.



© Copyright 2026 Sencon Group. All rights reserved. Specifications subject to change without notice. E&OE

TECHNICAL SPECIFICATIONS

Power Consumption:	24 VDC ± 4 VDC
Cable Type:	Quick disconnect
Response Time:	20 ms to 1.5s (factory set at 150 ms)
Setting Distance:	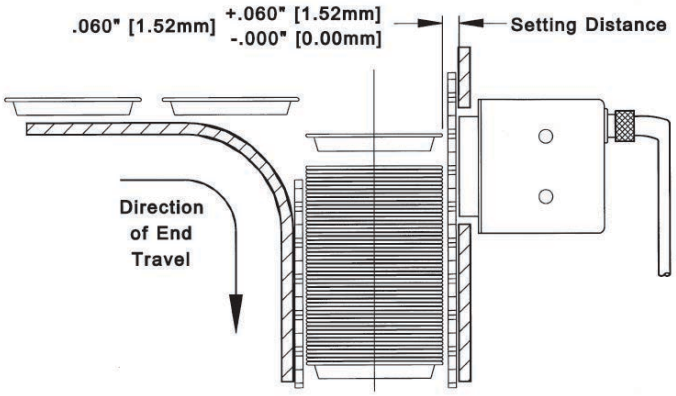
Construction:	Stainless Steel
Alarm Outputs:	Solid state switches: 0 to 190 Volts DC, 0 to 132 VAC (rms), 75mA max.
Minimum Pulse Width:	1ms
Bandwidth:	10khz
Additional Features:	Synchronization output for end splitting applications
Height	Height: 36.8mm (1.45”) Width: 62mm (2.44”) Depth: 79mm (3.11”) 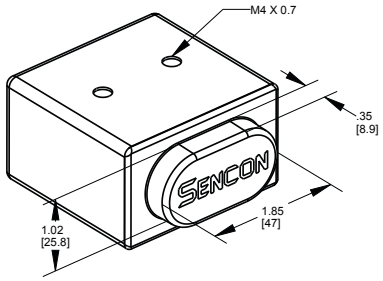 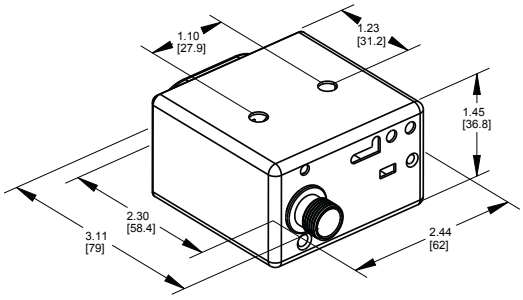
Weight	250g/9oz

© Copyright 2026 Sencon Group. All rights reserved. Specifications subject to change without notice. All trademarks acknowledged. E&OE

END GAP SENSORS

SIMPLE, QUICK INSTALLATION: Adjustment is achieved by pressing just two protected push-buttons. The built-in microprocessor takes care of the rest. Instant response without overshoot will maintain the correct gap size and keep the ends moving without interruption. The result is perfect control with no complications, no fuss and no need for fine tuning.

SMOOTH, MODULATED CONTROL: End handling systems that use clutches to control product flow in response to stop-start signals from basic proximity sensors are jerky, inefficient and demand high maintenance. They can now be replaced by smooth, modulated, analog control. Ends lines run better, more reliably, and with less need for maintenance.

REDUCED MAINTENANCE COSTS: Smaller modern end diameters need smaller gaps in the conveying system. This creates a large increase in clutch operating frequency, resulting in frequent replacement. Eliminating clutches altogether removes these maintenance costs along with the associated downtime.

IMPROVED LINE PERFORMANCE: Consistent and stable end conveying helps lines to run at maximum efficiency. Interruptions due to clutch wear and breakdown are eliminated. Gap sizes can be kept small to prevent end inversion and the problems this creates.

HOW THE SYSTEM WORKS:

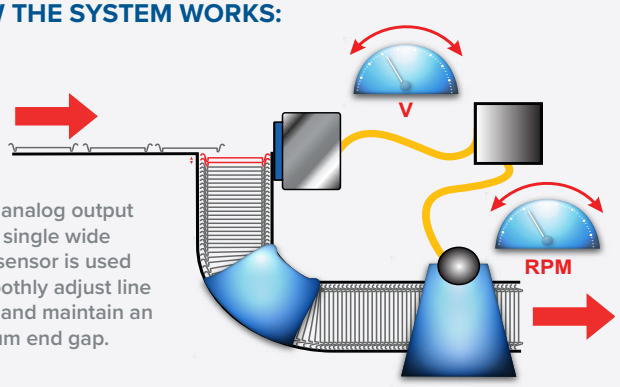

Linear analog output from a single wide faced sensor is used to smoothly adjust line speed and maintain an optimum end gap.

A special sensor is mounted to the track at the position where the gap is required. A control module is positioned nearby. Calibration simply involves setting the stack of ends to the minimum control height and pressing the 'empty' button, then filling the stack to the upper control height and pressing the 'full' button. The system will now provide an analog output that is linear between the control heights. This is used to control a variable speed drive which will maintain the level of ends around the center of the chosen gap. Calibration settings are stored in a non-volatile EEPROM memory. A slope switch allows control of a drive that feeds or extracts ends from the gap. Alarm outputs are provided to warn if the stack exceeds the preset limits. The response time can also be adjusted if necessary.

WORLDWIDE SUPPORT YOU CAN TRUST

We are committed to providing the best customer support worldwide with service engineers based in North and South America, Europe and Asia backed up with technical support from experienced industry specialists based at three technical support centers – you can trust Sencon.

Technical support is easily accessible through our 'Quick Assist' QR codes which offer support via WhatsApp*, email, web chat and telephone. Additionally, our online knowledge base provides support resources for all Sencon products.

***only available in Europe, Asia, Africa and Oceania**



Industry specialists since 1976

Sencon Inc.
North & Central America
TEL: +1 708 496 3100
info@sencon.com

Sencon
South America
TEL: + 55 19 9 9659 0145
info@sencon.lat

Sencon (UK) Ltd.
Europe, Asia, Africa, Oceania
TEL: +44 1905 827800
info@sencon.co.uk

www.sencon.com

© Copyright 2026 Sencon Group. All rights reserved. All trademarks acknowledged. Specifications subject to change without notice. E&OE