SENCON
SENSING • TESTING • GAUGING

End Counting Sensor

Allows production or spoilage data to be precisely monitored with 100% confidence

A highly accurate sensor for counting beverage or food ends with the ability to compensate for the backup, jiggling, and surging that occurs as ends pass the sensor. Sencon's famous count accuracy is possible thanks to our custom microchip design and advanced sensing technology. Conservative count accuracies of 30 per 1,000,000 are quoted, but actual accuracies achieved by users are often much higher.



- **Counts beverage and food ends with plain, colored, or black finishes**
- **Unparalleled accuracy: count accuracies of better than 30 per 1,000,000**
- **Unidirectional sensing - selectable counting direction**
- **Automated button-push setup/optimization**
- **Output divider function for use with low resolution counters**
- **Built in circuitry for controlling an end splitter on the bagging station**

Ordering Information

CODE	DESCRIPTION
11S-491-66	End Count Sensor (divide by 1, 2 or 10)

PLEASE NOTE: This sensor replaces the 11S-391-66 series sensors. End Counting sensors are not supplied with a cable.

Optional Extras

CODE	ITEM	DESCRIPTION
QDC-6F-4S	Cable	2 m (6ft) Cable with straight connector
QDC-16F-4S	Cable	5 m (16ft) Cable with straight connector
QDC-32F-4S	Cable	10 m (32ft) Cable with straight connector
QDC-6F-4R	Cable	2m (6ft) Cable with right angled connector
QDC-16F-4R	Cable	5 m (16ft) Cable with right angled connector
QDC-32F-4R	Cable	10 m (32ft) Cable with right angled connector

Other cable lengths and connector styles are available, please contact your local Sencon sales office for details.

OFFLINE END COUNTING

Quickly identify under- or over-filled sleeves of ends

The Bag Count Validator is a much more reliable solution for counting beverage ends for bagging than using hand held ends counters. The system consists of two special non-contact lid count sensors which are designed to provide extremely accurate end counts. The sensors sit on a slide on a linear bearing so that the ends stick can easily and quickly pass the counter.



© Copyright 2026 Sencon Group. All rights reserved. Specifications subject to change without notice. E&OE

TECHNICAL SPECIFICATIONS

Operating Voltage:	11 to 30 VDC
Divide By:	1, 2 or 10 selected by wiring
Supply Current:	<1W over operating voltage range, plus load current
Output Configuration:	Transistor switch to + VDC and 0 VDC in a push/pull arrangement
Count Rate:	Up to 40,000 epm
Accuracy:	99.998% assuming suitable application conditions
Minimum Pulse Width:	1ms
Bandwidth:	10khz
Additional Features:	Synchronization output for end splitting applications
Case Material	Stainless steel
Dimensions	**Height :** 36.8mm (1.45”) **Width :** 62mm (2.44”) **Depth:** 61mm (2.4”) 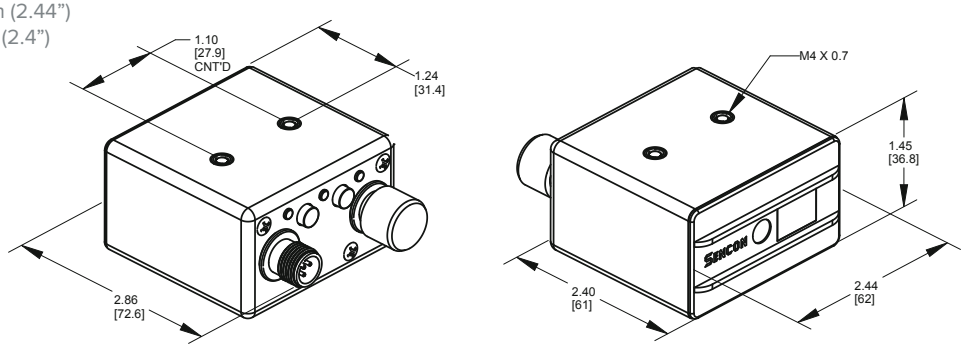
Weight	250g (90z)

© Copyright 2026 Sencon Group. All rights reserved. Specifications subject to change without notice. All trademarks acknowledged. E&OE

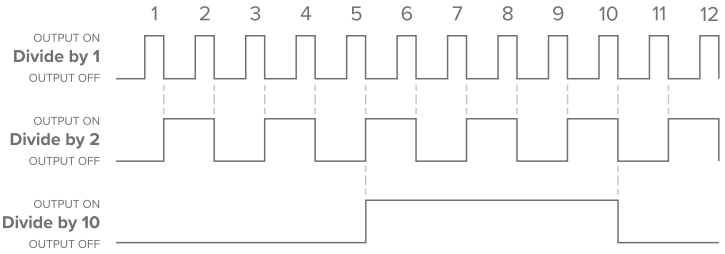

If ends flip over in the gaps between the belt and the downstackers, this can lead to seamer wrecks at the filler and then some very unhappy customers! You can avoid this with Sencon's End Gap Control System which evenly matches the take-away speed of the downstacker to that of the belt delivery, tightly regulating the stack height. Unlike standard prox sensors, Sencon's End Gap Sensor achieves this smoothly and continuously, which also helps to prevent your conveyor drives from wearing out so quickly.

WORLDWIDE SUPPORT YOU CAN TRUST

We are committed to providing the best customer support worldwide with service engineers based in North and South America, Europe and Asia backed up with technical support from experienced industry specialists based at three technical support centers – you can trust Sencon.

Technical support is easily accessible through our 'Quick Assist' QR codes which offer support via WhatsApp*, email, web chat and telephone. Additionally, our online knowledge base provides support resources for all Sencon products.

***only available in Europe, Asia, Africa and Oceania**



Industry specialists since 1976

Sencon Inc.
North & Central America
TEL: +1 708 496 3100
info@sencon.com

Sencon
South America
TEL: + 55 19 9 9659 0145
info@sencon.lat

Sencon (UK) Ltd.
Europe, Asia, Africa, Oceania
TEL: +44 1905 827800
info@sencon.co.uk

www.sencon.com

© Copyright 2026 Sencon Group. All rights reserved. All trademarks acknowledged. Specifications subject to change without notice. E&OE