SENCON
SENSING • TESTING • GAUGING

Can Counting Sensors

Precise monitoring of production and/or spoilage data with 100% confidence.

Sencon can counting sensors have been developed with unique designs for the specific needs of can making lines. Smart detection of the direction of flow means that cans are never counted twice even when they bounce, travel backwards, or shake in front of the sensor.



- **Unparalleled accuracy – count accuracies of 30 per 1,000,000 or better**
- **Smart unidirectional sensing of flow prevents cans being counted twice**
- **Continuous reliability – true 'fit and forget' with no need for adjustment or maintenance**
- **Optional 'divide-by' feature slows down the output signals to allow PLC's to process**
- **A new counting sensor (11-373-LP) for low profile cans is now available.**

Ordering Information

CODE	DESCRIPTION	CAN SIZE	HEIGHT
11P-370-06	Can Count Sensor	201 (52 mm) to 207.5 (63mm)	Quick disconnect
11P-371-06	Can Count Sensor	207.5 (63 mm) to 306 (86 mm)	Quick disconnect
11P-372-06	Can Count Sensor	306 (86 mm) to 607 (164 mm)	Quick disconnect
11P-373-LP	Can Count Sensor for low profile containers	207.5 (63 mm) to 306 (86 mm) for low profile containers ≤ 107 (36.5mm) high	Quick disconnect

PLEASE NOTE: Existing sensors with 11-, 11P-, or 11H- preifix are replaced by the combined 11P designation. Can Counting sensors are not supplied with a cable or mounting bracket. Counting sensors for small diameters and for rolled sheet stock are also available.

Optional Extras

CODE	DESCRIPTION	
UCBF-1	Mounting Brackets	Pair of stainless steel brackets
QDC-6F-4S	Cable	2 m (6ft) Cable with straight connector
QDC-16F-4S	Cable	5 m (16ft) Cable with straight connector
QDC-32F-4S	Cable	10 m (32ft) Cable with straight connector
QDC-6F-4R	Cable	2m (6ft) Cable with right angled connector
QDC-16F-4R	Cable	5 m (16ft) Cable with right angled connector
QDC-32F-4R	Cable	10 m (32ft) Cable with right angled connector

Other cable lengths and connector styles are available, please contact your local Sencon sales office for details.

CONTROL DOWN THE LINE WITH THE WORLD'S MOST WIDELY USED CAN MAKING SENSORS

Uniquely designed and precision made by Sencon, exclusively for the metal packaging industry

© Copyright 2026 Sencon Group. All rights reserved. Specifications subject to change without notice. E&OE

TECHNICAL SPECIFICATIONS

Operating Voltage	10 - 30 VDC
Connection Type	Quick disconnect M12 Micro 5 pin, compatible with some M12 Micro 4 pin**; 150 FEET [45.7 m] MAX cable run with 22AWG
Maximum Can Rate	5000 CPM (back to back)
Minimum Pulse Duration	200 µs
Minimum Frequency Response	5 kHz
Output Configuration (Push-Pull)	Transistor switch to + VDC and 0 VDC
Divide By	1, 2, 10 'Divide by' Output Signal Options 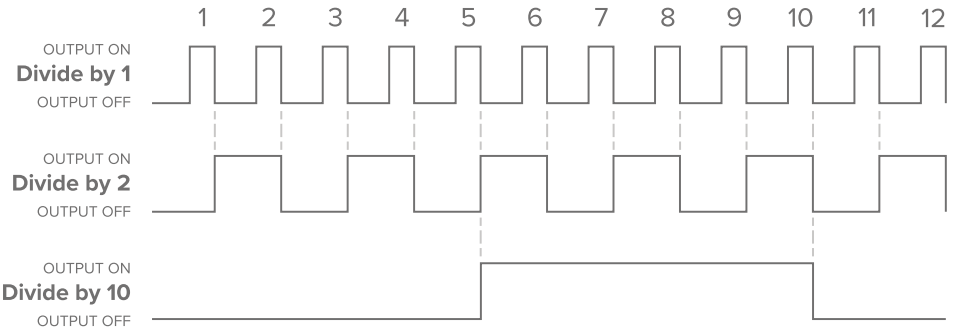
Accuracy	30 per 1,000,000*
Dimensions	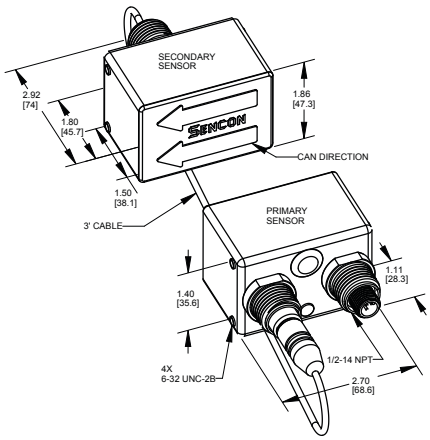 UCBF-1 Mounting Brackets (2 required) 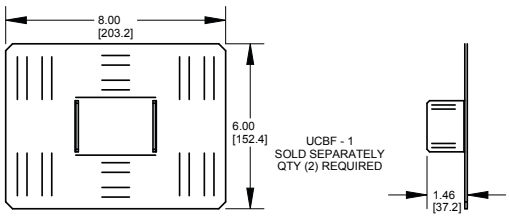
Weight	775g (27oz)
IP Rating	
Construction	Case manufactured from stainless steel and PBT (Polybutylene Terephthalate) and sealed to withstand the effects of vibration, humidity, EMI, fungus, coolants, hydraulic fluids and dust.

PLEASE NOTE: Beware of bursts of speed, e.g. gravity drops on filling lines. When spaces exist between cans, the can's transit velocity becomes a factor. For example, two can spaces between cans denotes an effective velocity of x3, resulting in a shorter ON time. If the divide-by option is not selected, the minimum pulse duration will limit the frequency response of devices suitable for connection to the output.

*Stated accuracy will only be achieved when sensors are correctly installed and aligned.

© Copyright 2026 Sencon Group. All rights reserved. Specifications subject to change without notice. All trademarks acknowledged. E&OE

CAN COUNTING SENSORS

COUNTING CANS IS NOTORIOUSLY DIFFICULT: The round shape of a can, coupled with the inherent shaking, jiggling and reversing of cans on the line is far beyond the capabilities of standard inductive or optical sensors leading to serious counting errors – and an inaccurate count is often worse than no count at all. These problems are eliminated with Sencon's can count sensors, which are designed exclusively to achieve highly accurate and reliable counts on canmaking lines. Sencon sensors allow precise monitoring of production and/or spoilage data with 100% confidence.

DIVIDED OUTPUT OPTION: Using the optional "divide-by" feature (1, 2, or 10) makes it possible to effectively slow down the output signals to an acceptable speed for PLCs to process while maintaining a highly accurate count for production and spoilage analysis. This provides a near perfect square wave, which may be needed for interfacing to displays and other equipment.

UNPARALLELED ACCURACY: Sencon's famous count accuracy is possible thanks to our custom microchip design and Sencon's own advanced sensing technology. Quoted count accuracies of 30 per 1,000,000 have been bettered in many installations.

UNIDIRECTIONAL SENSING: By intelligently sensing a can's direction of flow, cans that bounce or travel backwards in front of the sensor are never counted twice. Even cans shaking and jiggling in front of the sensor do not create a miscount.

CONTINUOUS RELIABILITY: By eliminating the need for user adjustments or maintenance, these sensors provide a 'fit and forget' approach to can counting. Dual head models also eliminate installation problems associated with achieving the correct sensing distance when cans are loosely contained in trackwork.

YOU CAN COUNT ON US

Our Count Sensors provide precise, dependable counting of cans and ends, helping you maintain full control of your production data. Advanced detection technology compensates automatically for backup, jiggle, and line surging, ensuring accurate counts even in challenging high-speed environments.



WORLDWIDE SUPPORT YOU CAN TRUST

We are committed to providing the best customer support worldwide with service engineers based in North and South America, Europe and Asia backed up with technical support from experienced industry specialists based at three technical support centers – you can trust Sencon.

Technical support is easily accessible through our 'Quick Assist' QR codes which offer support via WhatsApp*, email, web chat and telephone. Additionally, our online knowledge base provides support resources for all Sencon products.

***only available in Europe, Asia, Africa and Oceania**



Industry specialists since 1976

Sencon Inc.
North & Central America
TEL: +1 708 496 3100
info@sencon.com

Sencon
South America
TEL: + 55 19 9 9659 0145
info@sencon.lat

Sencon (UK) Ltd.
Europe, Asia, Africa, Oceania
TEL: +44 1905 827800
info@sencon.co.uk

www.sencon.com

© Copyright 2026 Sencon Group. All rights reserved. All trademarks acknowledged. Specifications subject to change without notice. E&OE