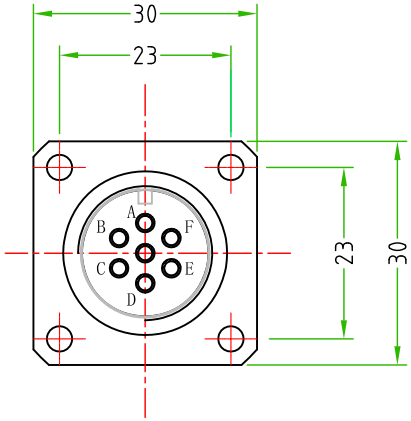

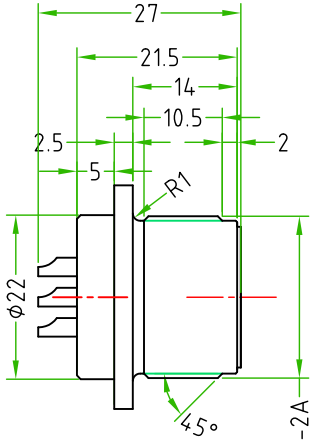

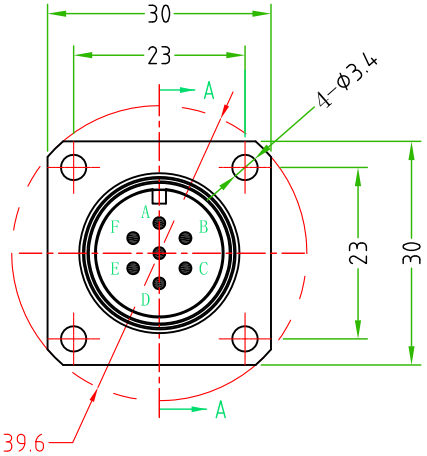

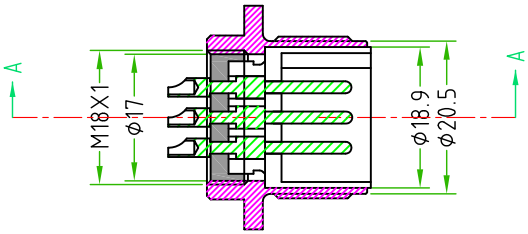

CONNECTOR FEATURES	
CONNECTOR TYPE	EN175000 TO PANEL
MOUNTING TYPE	FRONTAL
CONTACT TYPE	MALE TO SOLDERED
NUMBER OF CONTACTS CONNECTED	n°7
SIZE OF THE FLANGE	30X30mm
NUMBER OF THE FIXING HOLES	n°4
FIXING HOLES DISTANCE	23mm
FIXING HOLES DIAMETER	ø3,4mm
HOUSING MATERIAL	Brass+nickel plated (CuZnNi)
CONTACTS MATERIAL	PHOSPHOROUS BRONZE
CONTACTS SURFACE MATERIAL	NICKEL +0,45 m AU GOLD PLATED
CONNECTOR WITHOUT H.T.P.LOGO	

TOLLERANZE		DISEGNATORE LORENZO CIMMINO	DATA 25.03.09	SCALA 2:1	DISEGNO N.
U.d.M	ANGOLO	CONTROLLATO			
DESCRIZIONE EN175000 CONNECTOR MALE PANEL 7 POLES FRONTAL MOUNTING WITH FLANGE.FLANGE WITH N°4 HOLES ø3.4			TIPO EN17500 (DIN43563)		MATERIALE
H.T.P. HIGH TECH PRODUCTS			CODICE 15MP7000		