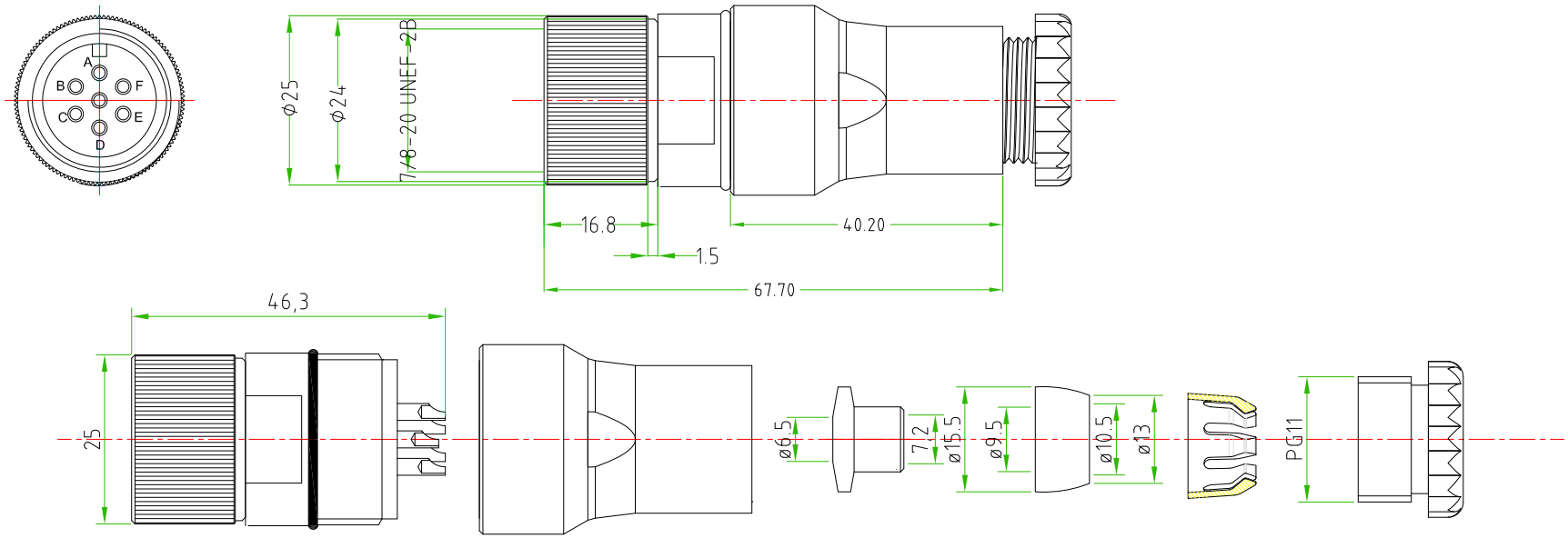

CONNECTOR FEATURES		
	PRODUCT TYPE	CIRCULAR CONNECTOR ACCORDING NORM EN175000 (DIN43563); (INTERCHANGEABLE WITH CONNECTORS CONFORMING TO MIL-C-5015 NORMATIVE)
	CONTACT TYPE	FEMALE
	N°OF CONTACT	7 POLES
	RATED CURRENT	0,5mm^2,6A,+70°C 1,5mm^2,9A,+70°C
	RATED VOLTAGE	60V-70V AC/DC
	HOUSING TYPE	180° SHEELL SIZE 145
	HOUSING COLOUR	BLACK
	EXIT CABLE	PG9/PG11 UNIFIED
	COUPLING NUT MATERIAL	Brass+nickel plated (CuZnNi)
	HOUSING MATERIAL	PA66
	O''RING MATERIAL	NBR

TOLLERANZE ±0.2	DISEGNATORE LORENZO CIMMINO	DATA 12.10.2012	SCALA 1:1		RIF.CLIENTE LEL-K1-8107
U.d.M / ANGOLO	CONTROLLATO MARCO MAZZOLINI				
DESCRIZIONE CIRCOLAR CONNECTOR ACCORDING NORM EN175000 (DIN43563); (INTERCHANGEABLE WITH CONNECTORS CONFORMING TO MIL-C-5015 NORMATIVE) 7POLES,PG9/PG11 UNIFIED		TIPO EN175000			MATERIALE
High Tech Products HTP H.T.P. HIGH TECH PRODUCTS		CODICE 15FC7000			